Panasonic®

Instruction Manual

AC Servo Motor and Driver

MINAS A4P Series

- Thank you for buying and using Panasonic AC Servo Motor and Driver, MINAS A4P Series.
- Read through this Instruction Manual for proper use, especially read "Precautions for Safety" (P.8 to 11) without fail for safety purpose.
- Keep this Manual at an easily accessible place so as to be referred anytime as necessary.

DV0P4490

CTi Automation - Phone: 800.894.0412 - Fax: 208.368.0415 - Web: www.ctiautomation.net - Email: info@ctiautomation.net

Content

[Before Using the Products]

page

Safety Precautions 8

Maintenance and Inspection 12

Introduction 14

Outline 14
On Opening the Package 14
Check of the Driver Model 14
Check of the Motor Model 15
Check of the Combination of the Driver and the Motor 16

Parts Description 18

Driver 18
Motor 20
Console 21

Installation 22

Driver 22
Motor 24
Console 26

[Preparation]

page

System Configuration and Wiring 28

Overall Wiring (Connecting Example of C-frame, 3-phase) 28
Overall Wiring (Connecting Example of E-frame) 30
Driver and List of Applicable Peripheral Equipments 32
Wiring of the Main Circuit (A to D-frame) 34
Wiring of the Main Circuit (E and F-frame) 35
Wiring to the Connector, CN X6 (Connection to Encoder) 38
Wiring to the Connector, CN X3 and 4
Wiring to the Connector, CN X7 (Connection to External Scale) 40
Wiring to the Connector, CN X5 (Connection to Host Controller) 41
Wiring for Connector CN X5 42
Interface Circuit 43
List of Signal for Connector CN X5 44

Setup with the Front Panel 48

Composition of Touch Panel and Display 48
Initial Status of the Front Panel Display (7-Segment LED) 48
Output Signals (Analog) and Their Functions 49

Built-in Holding Brake 50

Dynamic Brake 52

[Setting]

page

Parameter Setup 56

Outline of Parameter 56
How to Set 56
How to Connect 56
Composition of Parameters 57

List of Servo Parameter 58
List of 16-bit Positioning Parameters 73
List of 32-bit Positioning Parameters 77
List of Step Parameters 77
Setup of Torque Limit 78

How to Use the Console 80

Setup with the Console 80
Initial Status of the Console Display (7 Segment LED) 80
Mode Change 81
Monitor Mode 82
Teaching Mode 87
Parameter setup mode 91
EEPROM Writing Mode 96
Auto-Gain Tuning Mode 97
Auxiliary Function Mode 98
Copying Function (Console Only) 101

Outline of Setup Support Software, "PANATERM®" 103

Outline of PANATERM® 103
How to Connect 103

[Operation Setting]

page

Overview of Operation Setting 106

Step Operation 107

Step Operation 107
Example of Incremental Operation Setting 108
Example of Absolute Operation Setting 109
Example of Rotary Axis Operation Setting 110
Example of Dwell Timer Operation Setting 111

Jog Operation 112

Jog Operation 112

Homing 114

Homing Operation 114
Home Sensor + Z Phase (based on the front end) 116
Home Sensor (based on the front end) 117
Home sensor + Z phase (based on the rear end) 118
Limit Sensor + Z phase 120
Limit Sensor 121
Z Phase Homing 122
Bumping Homing 122
Data Set 123
Homing Offset Operation 124

Emergency Stop Operation/Deceleration-and-Stop Operation 125

Temporary Stop Operation 126

Block Operation 127

Overview of Block Operation 127
Continuous Block Operation 127
Combined Block Operation 128

Sequential Operation 130

S-shaped Acceleration/Deceleration Function 131

Timing Chart 132

Operation Timing after Power-ON 132
When an Error (Alarm) Has Occurred (at Servo-ON Command) 133
When an Alarm Has Been Cleared (at Servo-ON Command) 134
Servo-ON/OFF Action While the Motor Is at Stall (Servo-Lock) 135
Servo-ON/OFF Action While the Motor Is in Motion 135

Absolute System 136

Overview of Absolute System 136
Configuration of Absolute System 136
Battery (for Backup) Installation 136
Setup (Initialization) of Absolute Encoder 136

Outline of Full-Closed Control 140

What Is Full-Closed Control ? 140

[Adjustment]

page

Gain Adjustment 142

Real-Time Auto-Gain Tuning Mode 144

Adaptive Filter 147

Normal Mode Auto-Gain Tuning 148

Release of Automatic Gain Adjusting Function 151

Manual Gain Tuning (Basic) 152

Adjustment in Position Control Mode 153
Adjustment in Full-Closed Control Mode 154
Gain Switching Function 155
Suppression of Machine Resonance 158

Manual Gain Tuning (Application) 160

Instantaneous Speed Observer 160
Damping Control 161

[When in Trouble]

page

When in Trouble 164

What to Check ? 164
Protective Function (What is Error Code ?) 164
Protective Function (Detail of Error Code) 165

Troubleshooting 172

Motor Does Not Run / Motor Stops During an Operation 172
Point Deviates / Positioning Accuracy is Poor 173
Home position Slips 173
Abnormal Motor Noise or Vibration 173
Overshoot/Undershoot / Overheating of the Motor (Motor Burn-Out) 174
Parameter Returns to Previous Setup 174
Display of "Communication port or driver cannot be detected" Appears on the Screen While Using the PANATERM®. 174

[Supplement]

page

Conformity to EC Directives and UL Standards 176
Options 180
Recommended components 191
Dimensions (Driver) 192
Dimensions (Motor) 195
Permissible Load at Output Shaft 210
Motor Characteristics (S-T Characteristics) 211
Motor with Gear Reducer 217
Dimensions/Motor with Gear Reducer 218
Permissible Load at Output Shaft/Motor with Gear Reducer 220
Characteristics of Motor with Gear Reducer 221
Block Diagram of Driver 222
Block Diagram by Control Mode 224
Specifications (Driver) 226
Default Parameters (for all the models of A4P Series) 228

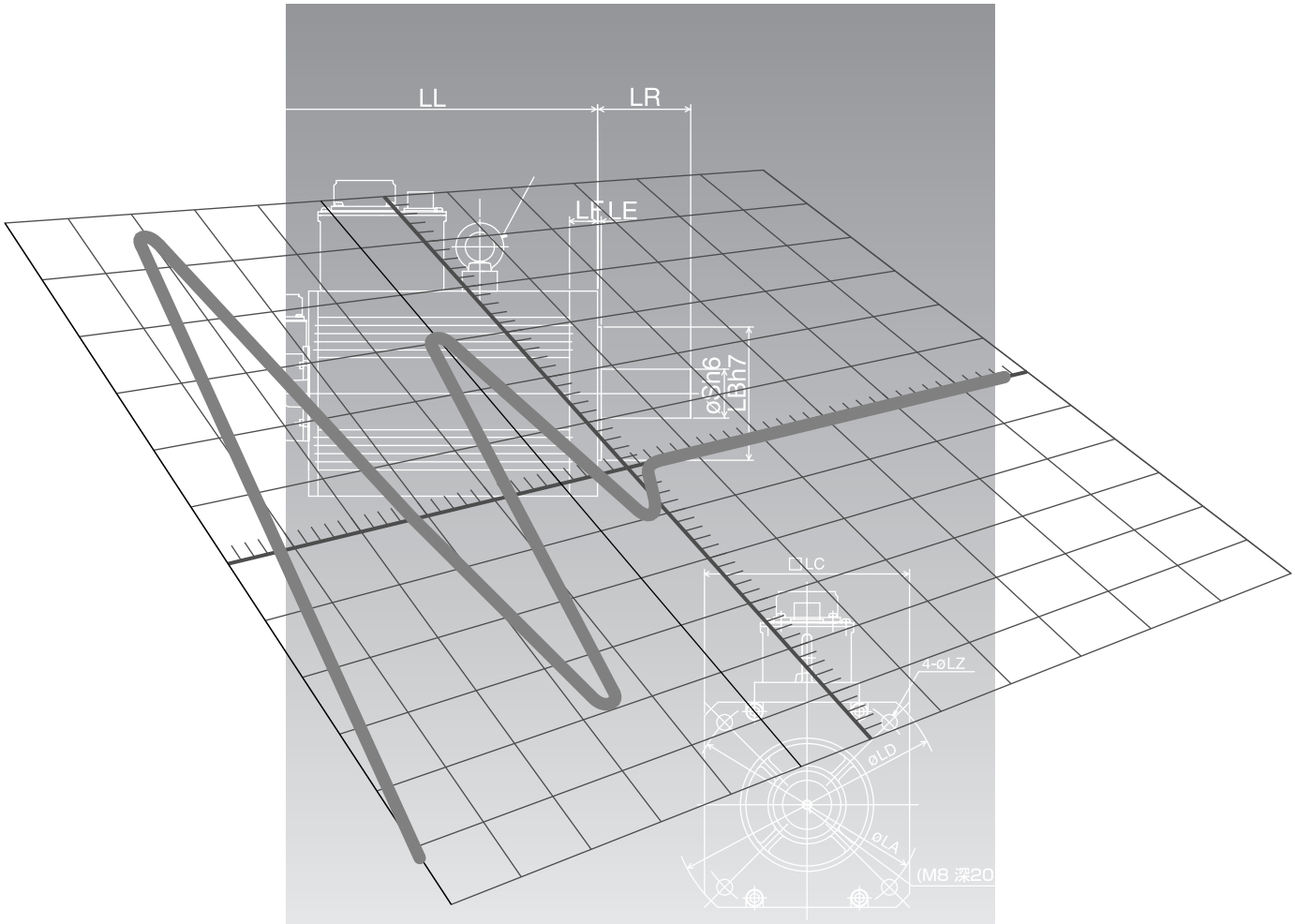

[Before Using the Products]

page

Safety Precautions 8

Maintenance and Inspection 12

Introduction 14

Outline 14
On Opening the Package 14
Check of the Driver Model 14
Check of the Motor Model 15
Check of the Combination of the Driver and the Motor 16

Parts Description 18

Driver 18
Motor 20
Console 21

Installation 22

Driver 22
Motor 24
Console 26

Safety Precautions Observe the Following Instructions Without Fail

Observe the following precautions in order to avoid damages on the machinery and injuries to the operators and other personnel during the operation.

- **In this document, the following symbols are used to indicate the level of damages or injuries which might be incurred by the misoperation ignoring the precautions.**

DANGER	Indicates a potentially hazardous situation which, if not avoided, will result in death or serious injury.
CAUTION	Indicates a potentially hazardous situation which, if not avoided, will result in minor injury or property damage.

- **The following symbols represent "MUST NOT" or "MUST" operations which you have to observe. (Note that there are other symbols as well.)**

	Represents "MUST NOT" operation which is inhibited.
	Represents "MUST" operation which has to be executed.

DANGER

Do not subject the Product to water, corrosive or flammable gases, and combustibles.

Failure to observe this instruction could result in fire.

Do not subject the cables to excessive force, heavy object, or pinching force, nor damage the cables.

Failure to observe this instruction could result in electrical shocks, damages and breakdowns.

Do not put your hands in the servo driver.

Failure to observe this instruction could result in burn and electrical shocks.

Do not touch the rotating portion of the motor while it is running.

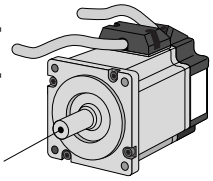

Failure to observe this instruction could result in injuries.

Do not drive the motor with external power.

Failure to observe this instruction could result in fire.

Do not touch the motor, servo driver and external regenerative resistor of the driver, since they become very hot.

Failure to observe this instruction could result in burns.

⚠ DANGER

Do not place combustibles near by the motor, driver and regenerative resistor.

Failure to observe this instruction could result in fire.

Do not place the console close to a heating unit such as a heater or a large wire wound resistor.

Failure to observe this instruction could result in fire and breakdowns.

Ground the earth terminal of the motor and driver without fail.

Failure to observe this instruction could result in electrical shocks.

Install an overcurrent protection, earth leakage breaker, over-temperature protection and emergency stop apparatus without fail.

Failure to observe this instruction could result in electrical shocks, injuries and fire.

Install an emergency stop circuit externally so that you can stop the operation and shut off the power immediately.

Failure to observe this instruction could result in injuries, electrical shocks, fire, breakdowns and damages.

Turn off the power and wait for a longer time than the specified time, before transporting, wiring and inspecting the driver.

Failure to observe this instruction could result in electrical shocks.

Install and mount the Product and machinery securely to prevent any possible fire or accidents incurred by earthquake.

Failure to observe this instruction could result in electrical shocks, injuries and fire.

Turn off the power and make it sure that there is no risk of electrical shocks before transporting, wiring and inspecting the motor.

Failure to observe this instruction could result in electrical shocks.

Check and confirm the safety of the operation after the earthquake.

Failure to observe this instruction could result in electrical shocks, injuries and fire.

Wiring has to be carried out by the qualified and authorized specialist.

Failure to observe this instruction could result in electrical shocks.

Mount the motor, driver and regenerative resistor on incombustible material such as metal.

Failure to observe this instruction could result in fire.

Make the correct phase sequence of the motor and correct wiring of the encoder.

Failure to observe this instruction could result in injuries breakdowns and damages.

⚠ CAUTION

Do not hold the motor cable or motor shaft during the transportation.

Failure to observe this instruction could result in injuries.

Never run or stop the motor with the electro-magnetic contactor installed in the main power side.

Failure to observe this instruction could result in breakdowns.

Do not give strong impact shock to the motor shaft.

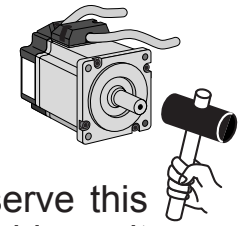

Failure to observe this instruction could result in breakdowns.

Do not approach to the machine since it may suddenly restart after the power resumption.
Design the machine to secure the safety for the operator even at a sudden restart.

Failure to observe this instruction could result in injuries.

Do not use the built-in brake as a "Braking" to stop the moving load.

Failure to observe this instruction could result in injuries and breakdowns.

Do not modify, disassemble nor repair the Product.

Failure to observe this instruction could result in fire, electrical shocks and injuries.

Do not block the heat dissipating holes or put the foreign particles into them.

Failure to observe this instruction could result in electrical shocks and fire.

Do not step on the Product nor place the heavy object on them.

Failure to observe this instruction could result in electrical shocks, injuries, breakdowns and damages.

Do not turn on and off the main power of the driver repeatedly.

Failure to observe this instruction could result in breakdowns.

Do not make an extreme gain adjustment or change of the drive.
Do not keep the machine running/operating unstably.

Failure to observe this instruction could result in injuries.

Do not give strong impact shock to the Product.

Failure to observe this instruction could result in breakdowns.

Do not pull the cables with excessive force.

Failure to observe this instruction could result in breakdowns.

⚠ CAUTION

Use the motor and the driver in the specified combination.

Failure to observe this instruction could result in fire.

Make a wiring correctly and securely.

Failure to observe this instruction could result in fire and electrical shocks.

Use the eye bolt of the motor for transportation of the motor only, and never use this for transportation of the machine.

Failure to observe this instruction could result in injuries and breakdowns.

Observe the specified mounting method and direction.

Failure to observe this instruction could result in breakdowns.

Make an appropriate mounting of the Product matching to its wight and output rating.

Failure to observe this instruction could result in injuries and breakdowns.

Observe the specified voltage.

Failure to observe this instruction could result in electrical shocks, injuries and fire.

Keep the ambient temperature below the permissible temperature for the motor and driver.

Failure to observe this instruction could result in breakdowns.

Execute the trial run without connecting the motor to the machine system and fix the motor. After checking the operation, connect to the machine system again.

Failure to observe this instruction could result in injuries.

Connect the brake control relay to the relay which is to shut off at emergency stop in series.

Failure to observe this instruction˜could result in injuries and breakdowns.

When any error occurs, remove the cause and release the error after securing the safety, then restart.

Failure to observe this instruction could result in injuries.

When you dispose the batteries, observe any applicable regulations or laws after insulating them with tape.

This Product shall be treated as Industrial Waste when you dispose.

Maintenance and Inspection

• Routine maintenance and inspection of the driver and motor are essential for the proper and safe operation.

Notes on Maintenance and Inspection

1) Turn on and turn off should be done by operators or inspectors themselves.
2) Internal circuit of the driver is kept charged with high voltage for a while even after power-off. Turn off the power and allow 15 minutes or longer after LED display of the front panel has gone off, before performing maintenance and inspection.
3) Disconnect all of the connection to the driver when performing megger test (Insulation resistance measurement) to the driver, otherwise it could result in breakdown of the driver.

Inspection Items and Cycles

General and normal running condition

Ambient conditions : 30˚C (annual average), load factor of 80% or lower, operating hours of 20 hours or less per day.

Perform the daily and periodical inspection as per the items below.

Type	Cycles	Items to be inspected
Daily ˜ inspection	˜ ˜ ˜ ˜ Daily˜ ˜ ˜ ˜ ˜ ˜ ˜	• Ambient temperature, humidity, speck, dust or foreign object˜ • Abnormal vibration and noise˜ • Main circuit voltage˜ • Odor˜ • Lint or other particles at air holes˜ • Cleanness at front portion of the driver and connecter˜ • Damage of the cables˜ • Loose connection or misalignment between the motor and ˜ machine or equipment ˜ • Pinching of foreign object at the load˜
Periodical ˜ inspection	˜ Annual	• Loose tightening˜ • Trace of overheat˜ • Damage of the terminals

<Note> Inspection cycle may change when the running conditions of the above change.

Guideline for Parts Replacement

Use the table below for a reference. Parts replacement cycle varies depending on the actual operating conditions. Defective parts should be replaced or repaired when any error have occurred.

Prohibited	**Disassembling for inspection and repair should be carried out only by authorized dealers or service company.**

Product	Component	Standard replacement cycles (hour)	Note
Driver	Smoothing capacitor	Approx. 5 years	These hours or cycles are reference. When you experience any error, replacement is required even before this standard replacement cycle.
	Cooling fan	2 to 3 years (10,000 to 30,000 hours)	
	Aluminum electrolytic capacitor (on PCB)	Approx. 5 years	
	Rush current preventive relay	Approx. 100,000 times (depending on working condition)	
	Rush current preventive resistor	Approx. 20,000 times (depending on working condition)	
Motor	Bearing	3 to 5 years (20,000 to 30,000 hours)	
	Oil seal	5000 hours	
	Encoder	3 to 5 years (20,000 to 30,000 hours)	
	Battery for absolute encoder	Life time varies depending on working conditions. Refer to the instruction manual attached to the battery for absolute encoder.	
Motor with gear reducer	Gear reducer	10,000 hours	

Introduction

Outline

MINAS-A4P Series is a servo motor and driver of I/O command type. A4P Series is based on the high-performance servo driver MINAS-A4 Series, which achieved response frequency of 1kHz, real-time auto-gain tuning function and damping control, and contains the NC function which can perform positioning more easily.
A maximum of 60 setting points can be set for (1) moving distance, (2) maximum rotation speed in a moving section, (3) acceleration time and (4) deceleration time in each moving section and positioning can be performed by an external contact input. Moreover, in combination with a motor equipped with a 17-bit absolute encoder, positioning can be performed at an absolute position and a homing operation is not required.
A4P Series have also improved the user-friendliness by offering some optional components, e.g., a console which enables you to monitor the rotation speed display, set up parameters, perform teaching (setup of target position) and copy parameters, and a waveform graphic display to show a operating waveform and the communication software "PANATERM®" available for frequency measurement to measure machine resonance point.
Read this document with care and exploit the versatile functions of A4P Series to full extent.

Cautions

1) Any part or whole of this document shall not be reproduced without written permission from us.
2) Contents of this document are subject to change without notice.

On Opening the Product Package

- Make sure that the model is what you have ordered.
- Check if the product is damaged or not during transportation.
- Check if the instruction manual is attached or not.
- Check if the power connector and motor connecters (CN X1 and CN X2 connectors) are attached or not (A to D-frame).

Contact to a dealer if you find any failures.

Check of the Driver Model

Contents of Name Plate

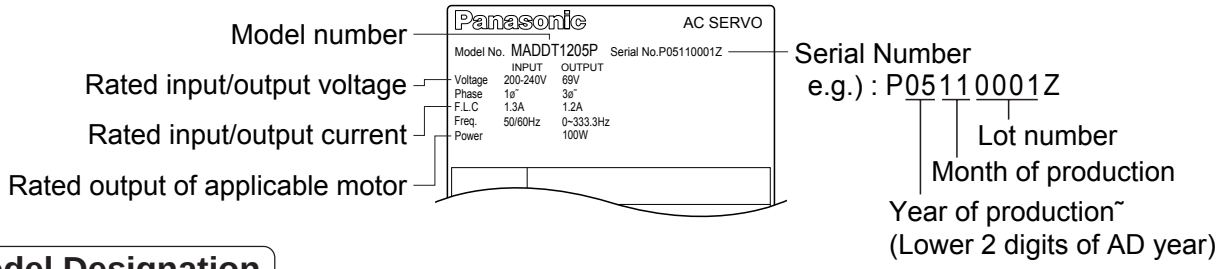

Model Designation

M A D D T 1 2 0 5 P ∗∗

1 to 4 — 5 to 6 — 7 — 8 to 9 — 10 — 11, 12

- 11, 12: Special specifications˜ (letters and numbers)
- 10: Interface specification˜ I/O command type
- 8 to 9: Current detector rating
- 7: Power supply
- 5 to 6: Max. current rating of ˜ power device
- 1 to 4: Frame-size symbol

Symbol	Frame
MADD˜	A4-series, A-frame˜
MBDD˜	A4-series, B-frame˜
MCDD˜	A4-series, C-frame˜
MDDD˜	A4-series, D-frame˜
MEDD˜	A4-series, E-frame˜
MFDD	A4-series, F-frame

Symbol	Current rating
T1˜	10A˜
T2˜	15A˜
T3˜	30A˜
T5˜	50A˜
T7˜	70A˜
TA˜	100A˜
TB	150A

Symbol	Specifications
1˜	Single phase, 100V˜
2˜	Single phase, 200V˜
3˜	3-phase, 200V˜
5	Single/3-phase, ˜ 200V

Symbol	Current rating	Symbol	Current rating
05˜	5A˜	30˜	30A˜
07˜	7.5A˜	40˜	40A˜
10˜	10A˜	64˜	64A˜
15˜	15A˜	90˜	90A˜
20˜	20A	A2	120A

Check of the Motor Model

Contents of Name Plate

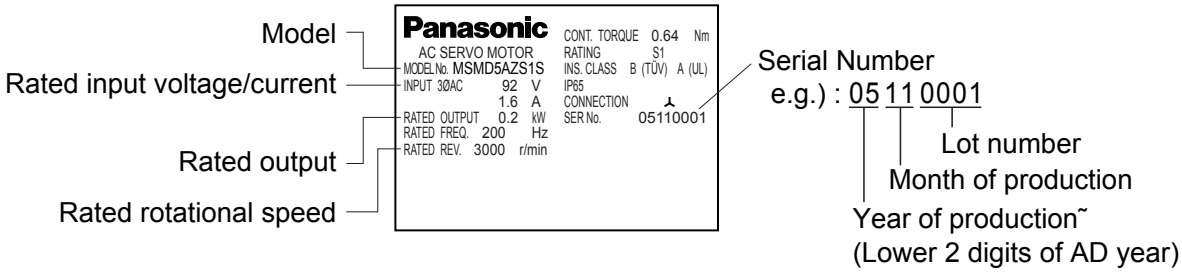

Model Designation

M S M D 5 A Z S 1 S ∗∗

1 to 4 | 5 to 6 | 7 | 8 | 9 | 10 | 11 to 12

Special specifications˜ (letters and numbers)

Motor structure

Design order˜
1: Standard

Symbol	Type
MAMA˜	Ultra low inertia˜ (100W to 750W)˜
MQMA˜	Low inertia˜ (100W to 400W)˜
MSMD˜	Low inertia˜ (50W to 750W)˜
MSMA˜	Low inertia˜ (1.0kW to 5.0kW)˜
MDMA˜	Middle inertia˜ (1.0kW to 5.0kW)˜
MHMA˜	High inertia˜ (500W to 5.0kW)˜
MFMA˜	Middle inertia˜ (400W to 4.5kW)˜
MGMA	Middle inertia˜ (900W to 4.5kW)

Motor rated output

Symbol	Output	Symbol	Output
5A˜	50W˜	15˜	1.5kW˜
01˜	100W˜	20˜	2.0kW˜
02˜	200W˜	25˜	2.5kW˜
04˜	400W˜	30˜	3.0kW˜
05˜	500W˜	40˜	4.0kW˜
08˜	750W˜	45˜	4.5kW˜
09˜	900W˜	50	5.0kW
10	1.0kW		

Voltage specifications

Symbol	Specifications
1˜	100 V˜
2˜	200 V˜
Z	100/200 common˜ (50W only)

Rotary encoder specifications

Symbol	Specifications			
	Format	Pulse count	Resolution	Wire count
P˜	Incremental˜	2500P/r˜	10,000˜	5-wire˜
S	Absolute/Incremental common	17bit	131,072	7-wire

Motor structure˜

MSMD, MQMA

Symbol	Shaft		Holding brake		Oil seal	
	Round	Key way	Without	With	Without	With*1
A˜	●		●		●	
B˜	●			●	●	
S˜		● *2	●		●	
T		● *2		●	●	

*1 The product with oil seal is a special order product.˜
*2 Key way with center tap.

[Products are standard stock items or build to order items. For details, inquire of the dealer.]

MAMA

Symbol	Shaft		Holding brake		Oil seal	
	Round	Key way	Without	With	Without	With
A˜	●		●		●	
B˜	●			●	●	
E˜		●	●		●	
F		●		●	●	

MSMA, MDMA, MFMA, MGMA, MHMA

Symbol	Shaft		Holding brake		Oil seal	
	Round	Key way	Without	With	Without	With
C˜	●		●			●
D˜	●			●		●
G˜		●	●			●
H		●		●		●

Introduction

Check of the Combination of the Driver and the Motor

This drive is designed to be used in a combination with the motor which are specified by us.
Check the series name of the motor, rated output torque, voltage specifications and encoder specifications.

Incremental Specifications, 2500P/r

<Remarks> Do not use in other combinations than those listed below.

Power supply	Applicable motor				Applicable driver	
	Motor series	Rated rotational speed	Model	Rated output	Model	Frame
Single phase, 200V	MAMA Ultra low inertia	5000r/min	MAMA012P1*	100W	MADDT1207P	A-frame
			MAMA022P1*	200W	MBDDT2210P	B-frame
3-phase, 200V			MAMA042P1*	400W	MCDDT3520P	C-frame
			MAMA082P1*	750W	MDDDT5540P	D-frame
Single phase, 100V	MAMA Low inertia	3000r/min	MQMA011P1*	100W	MADDT1107P	A-frame
			MQMA021P1*	200W	MBDDT2110P	B-frame
			MQMA041P1*	400W	MCDDT3120P	C-frame
Single phase, 200V			MQMA012P1*	100W	MADDT1205P	A-frame
			MQMA022P1*	200W	MADDT1207P	A-frame
			MQMA042P1*	400W	MBDDT2210P	B-frame
Single phase, 100V	MSMD Low inertia	3000r/min	MSMD5AZP1*	50W	MADDT1105P	A-frame
			MSMD011P1*	100W	MADDT1107P	
			MSMD021P1*	200W	MBDDT2110P	B-frame
			MSMD041P1*	400W	MCDDT3120P	C-frame
Single phase, 200V			MSMD5AZP1*	50W	MADDT1205P	A-frame
			MSMD012P1*	100W		
			MSMD022P1*	200W	MADDT1207P	
			MSMD042P1*	400W	MBDDT2210P	B-frame
Single/3-phase, 200V			MSMD082P1*	750W	MCDDT3520P	C-frame
	MSMA Low inertia	3000r/min	MSMA102P1*	1.0kW	MDDDT5540P	D-frame
			MSMA152P1*	1.5kW		
3-phase, 200V			MSMA202P1*	2.0kW	MEDDT7364P	E-frame
			MSMA302P1*	3.0kW	MFDDTA390P	F-frame
			MSMA402P1*	4.0kW	MFDDTB3A2P	
			MSMA502P1*	5.0kW		
Single/3-phase, 200V	MDMA Middle inertia	2000r/min	MDMA102P1*	1.0kW	MDDDT3530P	D-frame
			MDMA152P1*	1.5kW	MDDDT5540P	
3-phase, 200V			MDMA202P1*	2.0kW	MEDDT7364P	E-frame
			MDMA302P1*	3.0kW	MFDDTA390P	F-frame
			MDMA402P1*	4.0kW	MFDDTB3A2P	
			MDMA502P1*	5.0kW		
Single/3-phase, 200V	MHMA High inertia	2000r/min	MHMA052P1*	500W	MCDDT3520P	C-frame
			MHMA102P1*	1.0kW	MDDDT3530P	D-frame
			MHMA152P1*	1.5kW	MDDDT5540P	
3-phase, 200V			MHMA202P1*	2.0kW	MEDDT7364P	E-frame
			MHMA302P1*	3.0kW	MFDDTA390P	F-frame
			MHMA402P1*	4.0kW	MFDDTB3A2P	
			MHMA502P1*	5.0kW		
Single/3-phase, 200V	MFMA Middle inertia	2000r/min	MFMA042P1*	400W	MCDDT3520P	C-frame
			MFMA152P1*	1.5kW	MDDDT5540P	D-frame
3-phase, 200V			MFMA252P1*	2.5kW	MEDDT7364P	E-frame
			MFMA452P1*	4.5kW	MFDDTB3A2P	F-frame
Single/3-phase, 200V	MGMA Middle inertia	1000r/min	MGMA092P1*	900W	MDDDT5540P	D-frame
3-phase, 200V			MGMA202P1*	2.0kW	MFDDTA390P	F-frame
			MGMA302P1*	3.0kW	MFDDTB3A2P	
			MGMA452P1*	4.5kW		

<Note>
Suffix of " * " in the applicable motor model represents the motor structure.

Absolute/Incremental Specifications, 17-bit

<Remarks> Do not use in other combinations than those listed below.

Power supply	Applicable motor				Applicable driver	
	Motor series	Rated rotational speed	Model	Rated output	Model	Frame
Single phase, 200V	MAMA Ultra low inertia	5000r/min	MAMA012S1*	100W	MADDT1207P	A-frame
			MAMA022S1*	200W	MBDDT2210P	B-frame
3-phase, 200V			MAMA042S1*	400W	MCDDT3520P	C-frame
			MAMA082S1*	750W	MDDDT5540P	D-frame
Single phase, 100V	MAMA Low inertia	3000r/min	MQMA011S1*	100W	MADDT1107P	A-frame
			MQMA021S1*	200W	MBDDT2110P	B-frame
			MQMA041S1*	400W	MCDDT3120P	C-frame
Single phase, 200V			MQMA012S1*	100W	MADDT1205P	A-frame
			MQMA022S1*	200W	MADDT1207P	A-frame
			MQMA042S1*	400W	MBDDT2210P	B-frame
Single phase, 100V	MSMD Low inertia	3000r/min	MSMD5AZS1*	50W	MADDT1105P	A-frame
			MSMD011S1*	100W	MADDT1107P	
			MSMD021S1*	200W	MBDDT2110P	B-frame
			MSMD041S1*	400W	MCDDT3120P	C-frame
Single phase, 200V			MSMD5AZS1*	50W	MADDT1205P	A-frame
			MSMD012S1*	100W		
			MSMD022S1*	200W	MADDT1207P	
			MSMD042S1*	400W	MBDDT2210P	B-frame
Single/3-phase, 200V			MSMD082S1*	750W	MCDDT3520P	C-frame
	MSMA Low inertia	3000r/min	MSMA102S1*	1.0kW	MDDDT5540P	D-frame
			MSMA152S1*	1.5kW		
3-phase, 200V			MSMA202S1*	2.0kW	MEDDT7364P	E-frame
			MSMA302S1*	3.0kW	MFDDTA390P	F-frame
			MSMA402S1*	4.0kW	MFDDTB3A2P	
			MSMA502S1*	5.0kW		
Single/3-phase, 200V	MDMA Middle inertia	2000r/min	MDMA102S1*	1.0kW	MDDDT3530P	D-frame
			MDMA152S1*	1.5kW	MDDDT5540P	
3-phase, 200V			MDMA202S1*	2.0kW	MEDDT7364P	E-frame
			MDMA302S1*	3.0kW	MFDDTA390P	F-frame
			MDMA402S1*	4.0kW	MFDDTB3A2P	
			MDMA502S1*	5.0kW		
Single/3-phase, 200V	MHMA High inertia	2000r/min	MHMA052S1*	500W	MCDDT3520P	C-frame
			MHMA102S1*	1.0kW	MDDDT3530P	D-frame
			MHMA152S1*	1.5kW	MDDDT5540P	
3-phase, 200V			MHMA202S1*	2.0kW	MEDDT7364P	E-frame
			MHMA302S1*	3.0kW	MFDDTA390P	F-frame
			MHMA402S1*	4.0kW	MFDDTB3A2P	
			MHMA502S1*	5.0kW		
Single/3-phase, 200V	MFMA Middle inertia	2000r/min	MFMA042S1*	400W	MCDDT3520P	C-frame
			MFMA152S1*	1.5kW	MDDDT5540P	D-frame
3-phase, 200V			MFMA252S1*	2.5kW	MEDDT7364P	E-frame
			MFMA452S1*	4.5kW	MFDDTB3A2P	F-frame
Single/3-phase, 200V	MGMA Middle inertia	1000r/min	MGMA092S1*	900W	MDDDT5540P	D-frame
3-phase, 200V			MGMA202S1*	2.0kW	MFDDTA390P	F-frame
			MGMA302S1*	3.0kW	MFDDTB3A2P	
			MGMA452S1*	4.5kW		

<Notes>

1) Suffix of " * " in the applicable motor model represents the motor structure.
2) Default of the driver is set for the incremental encoder specifications.
   When you use in absolute, make the following operations.
   a) Install a battery for absolute encoder. (refer to P.190, "Options" of Supplement.)
   b) Switch the parameter SV.Pr0B (Absolute encoder setup) from "1 (default)" to "0".
3) No wiring for back up battery is required when you use the absolute 17-bit encoder in incremental.

Parts Description

Driver

• A and B-frame

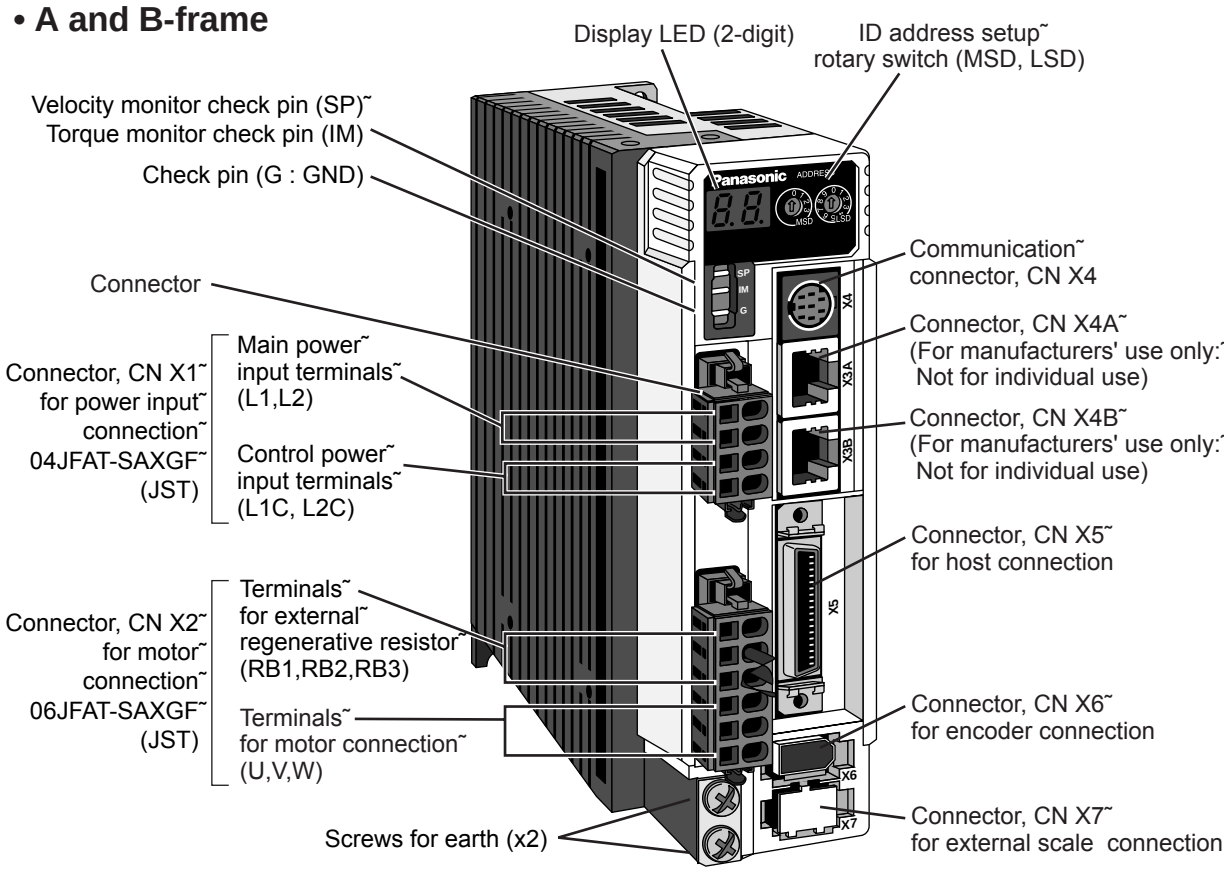

e.g.) : MADDT1207P (Single phase, 200V, 200W : A-frame)

• C and D-frame

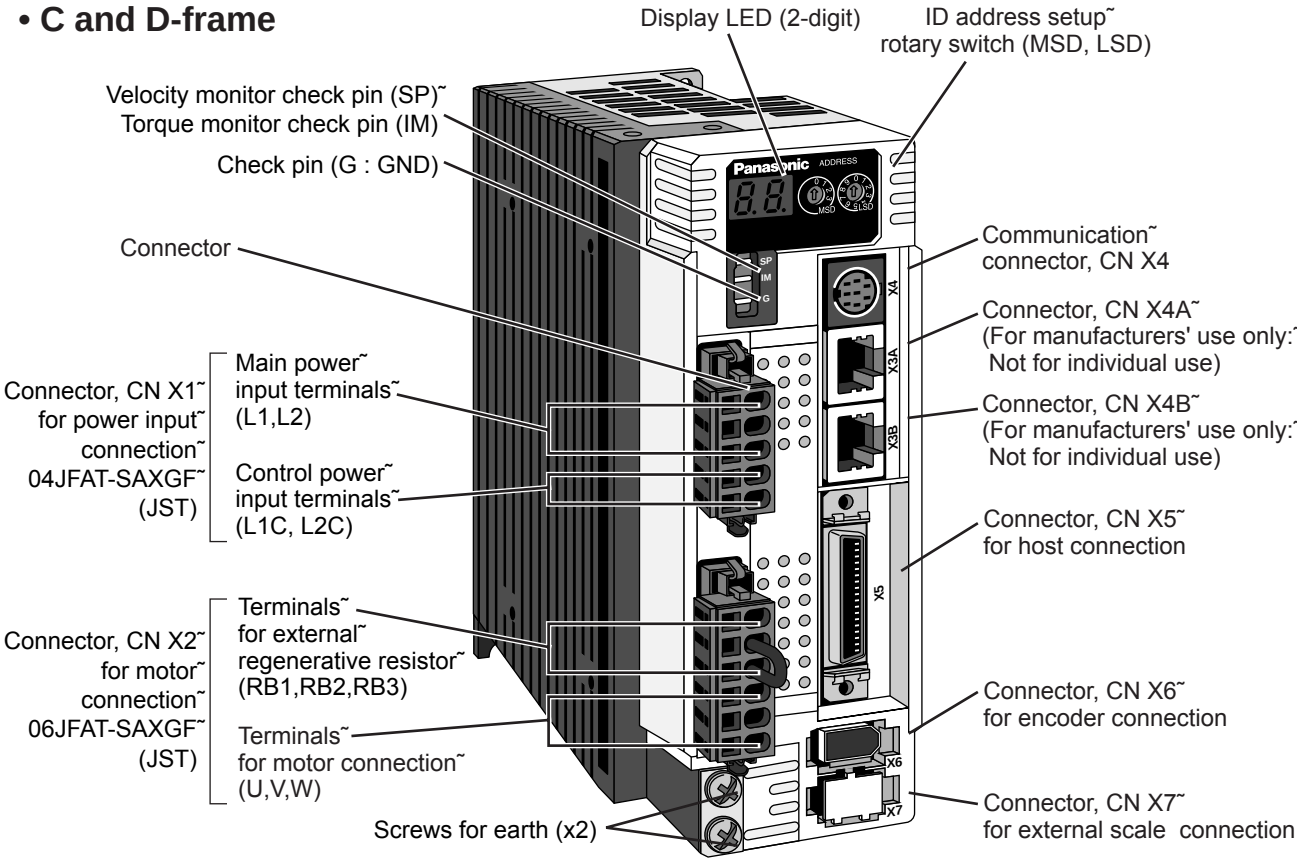

e.g.) : MCDDT3520P (Single/3-phase, 200V, 750W : C-frame)

<Note>

X1 and X2 are attached in A to D-frame driver.

• E and F-frame

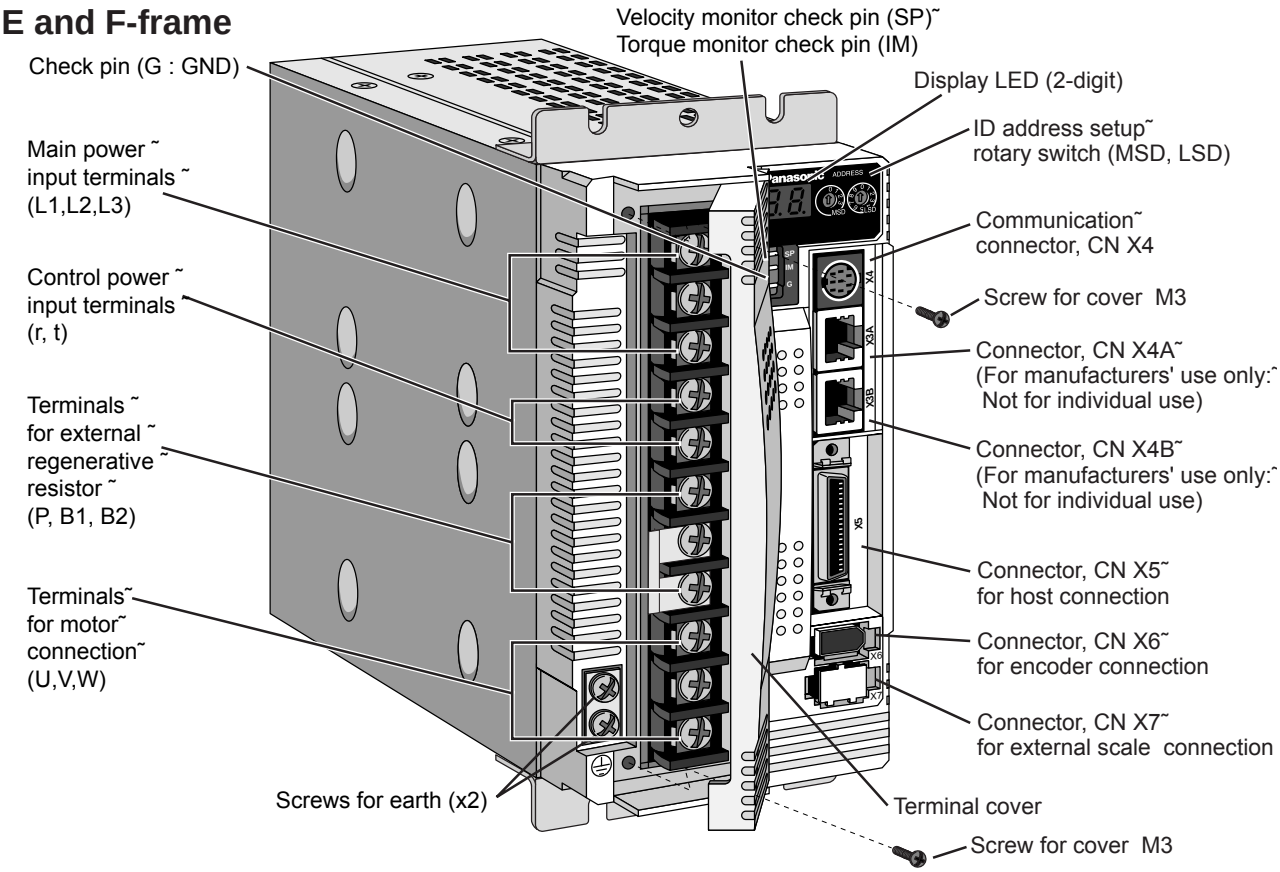

e.g.) : MEDDT7364P (3-phase, 200V, 2.0kW : E-frame)

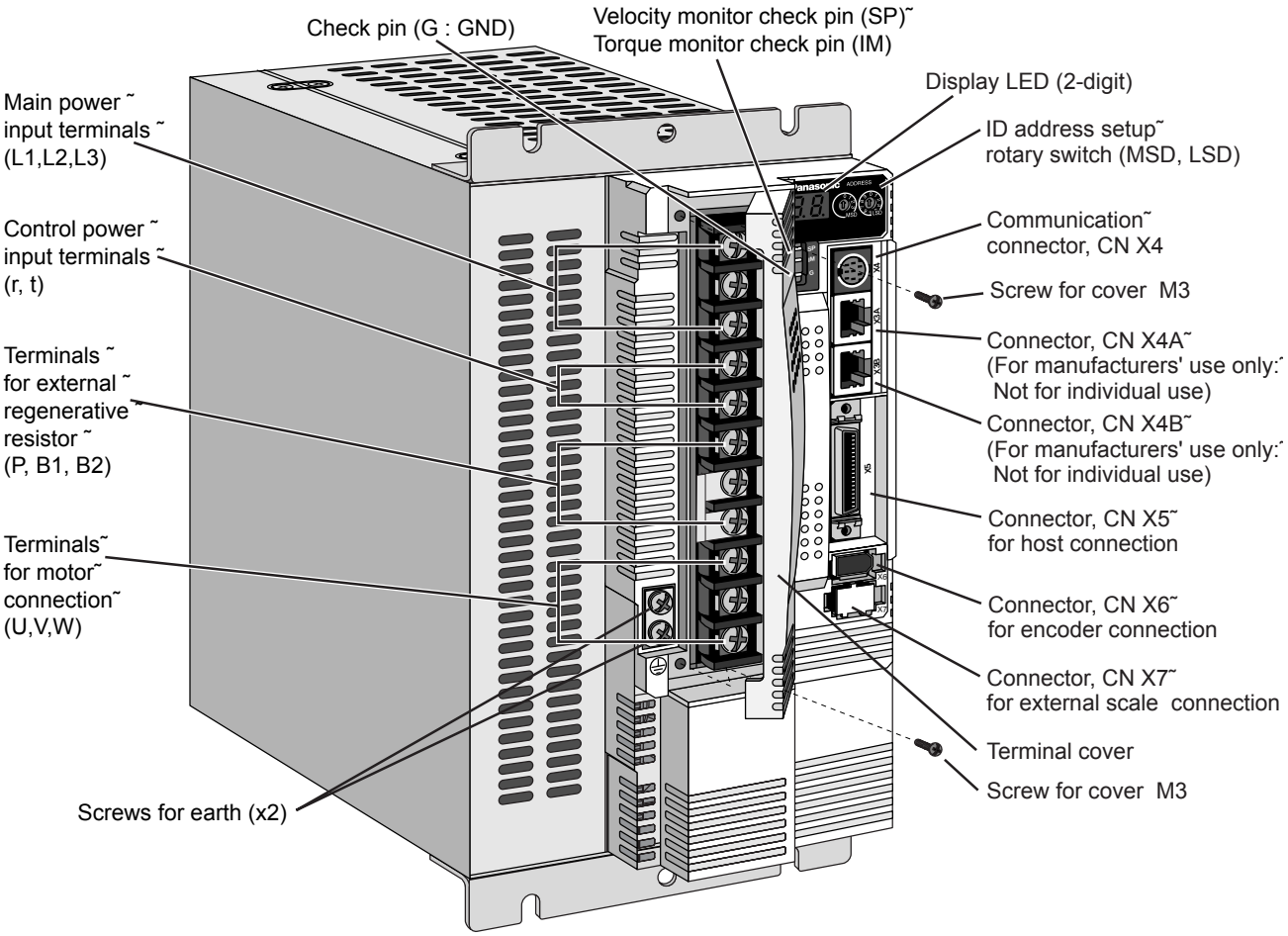

e.g.) : MFDDTB3A2P (3-phase, 200V, 5.0kW : F-frame)

<Note>

For details of each model, refer to "Dimensions " (P.192 to 194) of Supplement.

Parts Description

Motor

- MSMD 50W to 750W
- MAMA 100W to 750W
- MQMA 100W to 400W

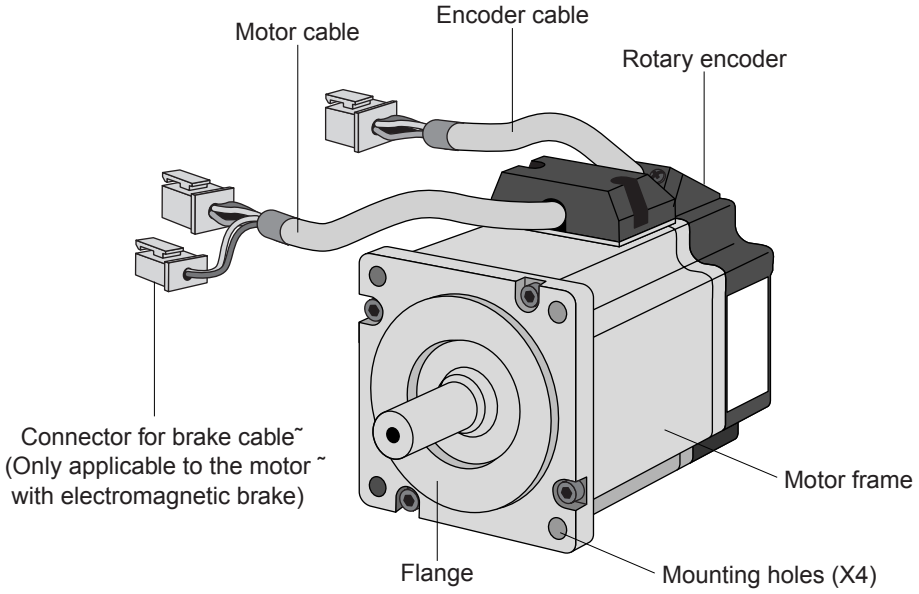

e.g.) : Low inertia type (MSMD series, 50W)

- MSMA 1.0kW to 5.0kW
- MDMA 1.0kW to 5.0kW
- MHMA 500W to 5.0kW
- MFMA 400W to 4.5kW
- MGMA 900W to 4.5kW

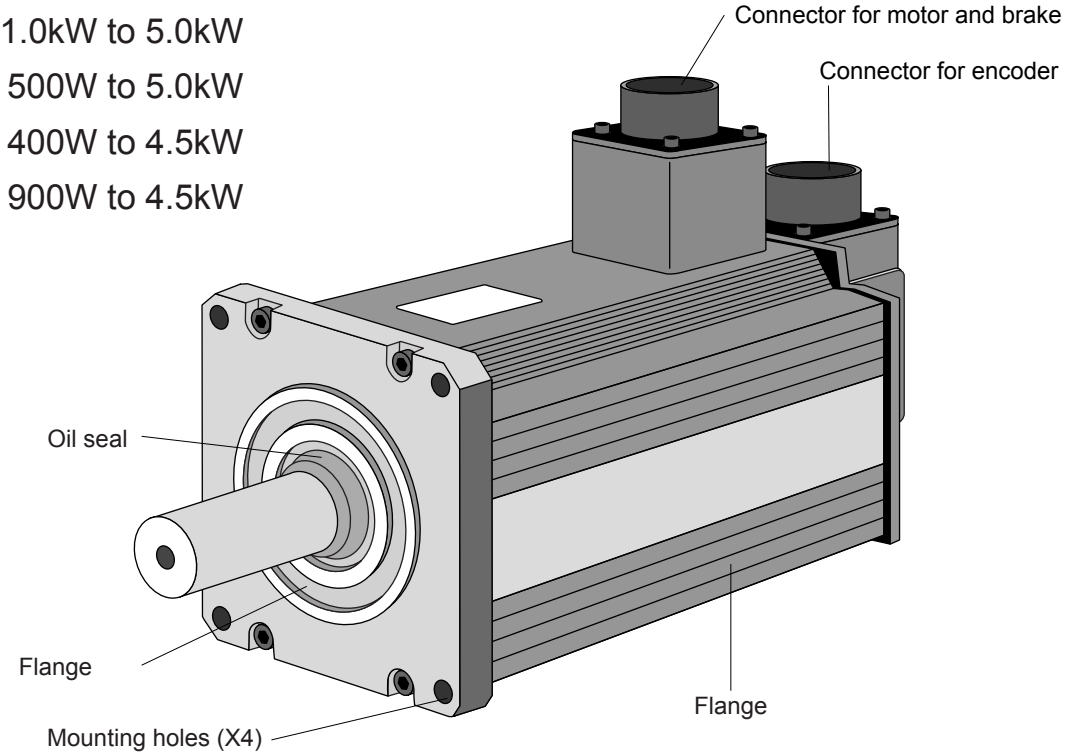

e.g.) : Middle inertia type (MDMA series, 1.0kW)

<Note>

For details of each model, refer to "Dimensions " (P.195 to P.209) of Supplement.

Console

Main Body

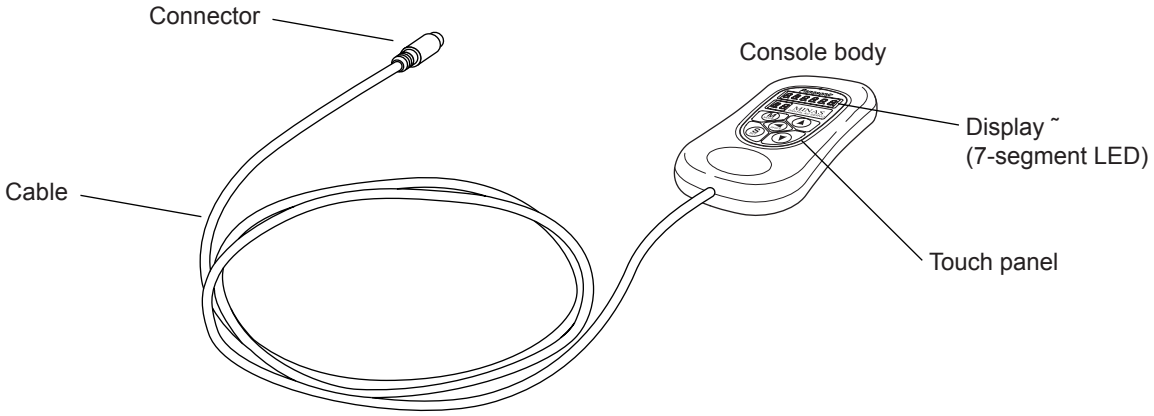

<Note>
Console is an option (Part No.: DV0P4420).

Display/Touch panel

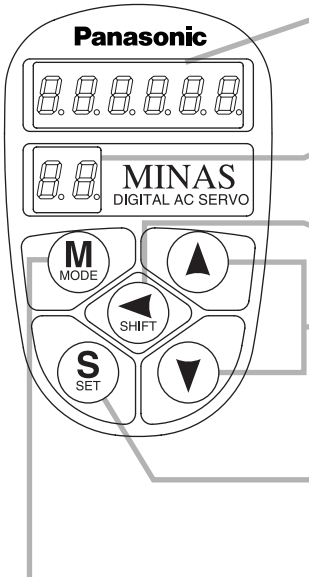

Display LED (6-digit)
All of LED will flash when error occurs, and switch to error display screen.

Display LED (in 2 digits)
Parameter No. is displayed at parameter setup mode. Point No. is displayed at teaching mode.

SHIFT Button
Press this to shift the digit for data change.

▲ ▼ Button
Press these to change data or execute selected action of parameter.
Numerical value increases by pressing ,▲,
decreases by pressing ▼.

SET Button
Press this to shift each mode which is selected by mode switching button to EXECUTION display.

Mode Switching Button Press this to switch 7 kinds of mode.

1) Monitor mode
2) Teaching mode
   - Target position settings established by teaching
   - Test operation
3) Parameter setup mode
4) EEPROM write mode
5) Normal auto-gain tuning mode
6) Auxiliary function mode
   - Alarm clear
   - Absolute encoder clear
7) Copy mode
   - Copying of parameters from the driver to the console.
   - Copying of parameters from the console to the driver.

The data for the parameters is set after the mode has been switched to the parameter setup mode. For details on operation, refer to the instruction manual provided with the console.

How to Install

Install the driver and the motor properly to avoid a breakdown or an accident.

Driver

Installation Place

1) Indoors, where the products are not subjected to rain or direct sun beams. The products are not water-proof.
2) Where the products are not subjected to corrosive atmospheres such as hydrogen sulfide, sulfurous acid, chlorine, ammonia, chloric gas, sulfuric gas, acid, alkaline and salt and so on, and are free from splash of inflammable gas, grinding oil, oil mist, iron powder or chips and etc.
3) Well-ventilated and low humidity and dust-free place.
4) Vibration-free place

Environmental Conditions

Item	Condition
Ambient temperature˜	0°C to 55°C (free from freezing)˜
Ambient humidity˜	Less than 90% RH (free from condensation)˜
Storage temperature˜	–20°C to 80°C (free from freezing)˜
Storage humidity˜	Less than 90% RH (free from condensation)˜
Vibration˜	Lower than 5.9m/S^2 (0.6G), 10 to 60Hz˜
Altitude	Lower than 1000m

How to Install

1) Rack-mount type. Install in vertical position, and reserve enough space around the servo driver for ventilation. Base mount type (rear mount) is standard (A to D-frame)
2) Use the optional mounting bracket when you want to change the mounting face.

A to D-frame

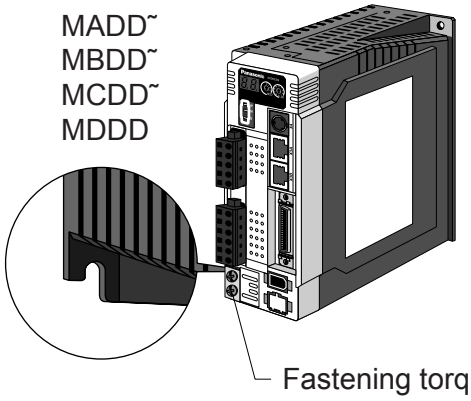

e.g.) In case of C-frame

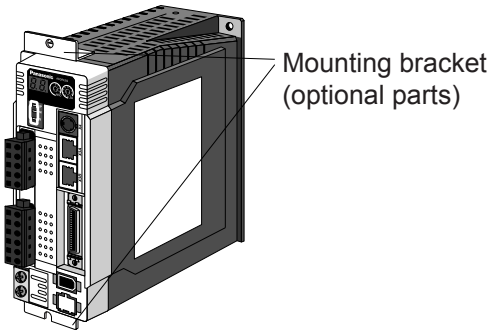

E and F-frame

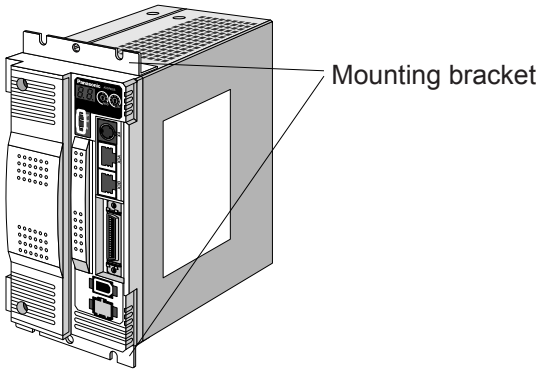

Mounting Direction and Spacing

- Reserve enough surrounding space for effective cooling.
- Install fans to provide uniform distribution of temperature in the control panel.
- Observe the environmental conditions of the control panel described in the next page.

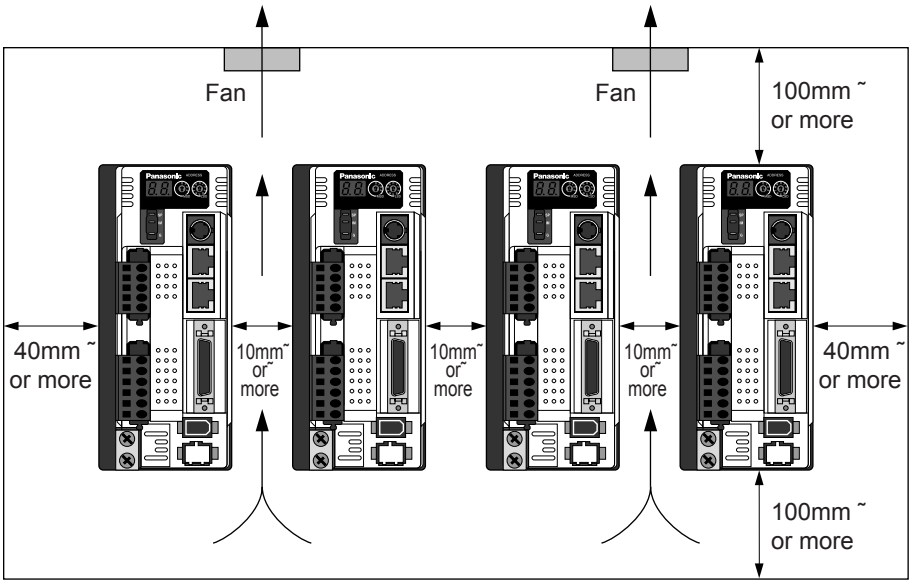

<Note>
It is recommended to use the conductive paint when you make your own mounting bracket, or repaint after peeling off the paint on the machine for installing the products, in order to make noise countermeasure.

Caution on Installation

We have been making the best effort to ensure the highest quality, however, application of exceptionally large external noise disturbance and static electricity, or failure in input power, wiring and components may result in unexpected action. It is highly recommended that you make a fail-safe design and secure the safety in the operative range.
There might be a chance of smoke generation due to the failure of these products. Pay an extra attention when you apply these products in a clean room environment.

How to Install

Motor

Installation Place

Since the conditions of location affect a lot to the motor life, select a place which meets the conditions below.

1) Indoors, where the products are not subjected to rain or direct sun beam. The products are not water-proof.
2) Where the products are not subjected to corrosive atmospheres such as hydrogen sulfide, sulfurous acid, chlorine, ammonia, chloric gas, sulfuric gas, acid, alkaline and salt and so on, and are free from splash of inflammable gas, grinding oil, oil mist, iron powder or chips and etc.
3) Where the motor is free from grinding oil, oil mist, iron powder or chips.
4) Well-ventilated and humid and dust-free place, far apart from the heat source such as a furnace.
5) Easy-to-access place for inspection and cleaning.
6) Vibration-free place.
7) Avoid enclosed place. Motor may gets hot in those enclosure and shorten the motor life.

Environmental Conditions

Item		Condition
Ambient temperature		0°C to 40°C (free from freezing) *1
Ambient humidity		Less than 85% RH (free from condensation)
Storage temperature		–20°C to 80°C (free from freezing) *2
Storage humidity		Less than 85% RH (free from condensation)
Vibration	Motor only	Lower than 49m/s² (5G) at running, 24.5m/s² (2.5G) at stall
Impact	Motor only	Lower than 98m/s² (10G)
Enclosure rating	Motor only	IP65 (except rotating portion of output shaft and lead wire end) • These motors conform to the test conditions specified in EN standards (EN60529, EN60034-5). Do not use these motors in application where water proof performance is required such as continuous wash-down operation.

*1 Ambient temperature to be measured at 5cm away from the motor.
*2 Permissible temperature for short duration such as transportation.

How to Install

You can mount the motor either horizontally or vertically as long as you observe the followings.

1) Horizontal mounting
   • Mount the motor with cable outlet facing downward for water/oil countermeasure.
2) Vertical mounting
   • Use the motor with oil seal (non-standard) when mounting the motor with gear reducer to prevent the reducer oil/grease from entering to the motor.
3) For mounting dimensions, refer to P.195 to 209 "Dimensions".

Oil/Water Protection

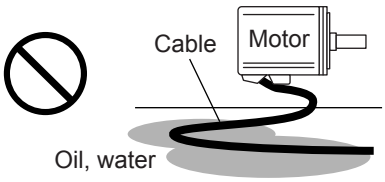

1) Don't submerge the motor cable to water or oil.
2) Install the motor with the cable outlet facing downward.
3) Avoid a place where the motor is subjected to oil or water.
4) Use the motor with an oil seal when used with the gear reducer, so that the oil may not enter to the motor through shaft.

Stress to Cables

1) Avoid a stress application to the cable outlet and connecting portion by bending or self-weight.
2) Especially in an application where the motor itself travels, fix the attached cable and contain the extension junction cable into the bearer so that the stress by bending can be minimized.
3) Take the cable bending radius as large as possible. (Minimum R20mm)

Permissible Load to Output Shaft

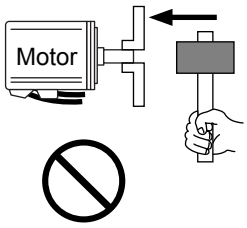

1) Design the mechanical system so that the applied radial load and/or thrust load to the motor shaft at installation and at normal operation can meet the permissible value specified to each model.
2) Pay an extra attention when you use a rigid coupling. (Excess bending load may damage the shaft or deteriorate the bearing life.
3) Use a flexible coupling with high stiffness designed exclusively for servo application in order to make a radial thrust caused by micro misalignment smaller than the permissible value.
4) For permissible load of each model, refer to P.210, "List of Permissible Load to Output Shaft" of Supplement.

Notes on Installation

1) Do not apply direct impact to the shaft by hammer while attaching/detaching a coupling to and from the motor shaft.
   (Or it may damage the encoder mounted on the other side of the shaft.)
2) Make a full alignment. (incomplete alignment may cause vibration and damage the bearing.)
3) If the motor shaft is not electrically grounded, it may cause electrolytic corrosion to the bearing depending on the condition of the machine and its mounting environment, and may result in the bearing noise. Check and verification by customer is required.

How to Install

Console

Installation Place

1) Indoors, where the products are not subjected to rain or direct sun beam. The products are not water-proof.
2) Where the products are not subjected to corrosive atmospheres such as hydrogen sulfide, sulfurous acid, chlorine, ammonia, chloric gas, sulfuric gas, acid, alkaline and salt and so on, and are free from splash of inflammable gas, grinding oil, oil mist, iron powder or chips and etc.
3) Well-ventilated and low humidity and dust-free place.
4) Easy-to-access place for inspection and cleaning

Environmental Conditions

Item	Condition
Ambient temperature˜	0°C to 55°C (free from freezing)˜
Ambient humidity˜	Less than 90% RH (free from condensation)˜
Storage temperature˜	–20°C to 80°C (free from freezing)˜
Storage humidity˜	Less than 90% RH (free from condensation)˜
Vibration˜	Lower than 5.9m/s^2 (0.6G), 10 to 60Hz˜
Impact˜	Conform to JISC0044 (Free fall test, 1m for 2 directions, 2 cycles)˜
Altitude	Lower than 1000m

<Cautions>

- Do not give strong impact to the products.
- Do not drop the products.
- Do not pull the cables with excess force.
- Avoid the place near to the heat source such as a heater or a large winding resistor.

How to Connect

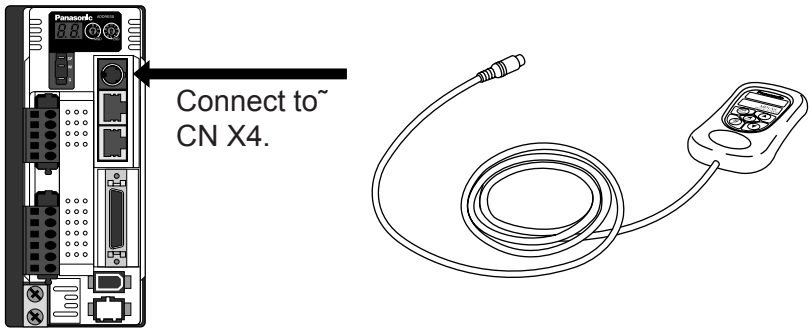

<Remarks>

- Connect the console connector securely to CN X4 connector of the driver
- Never pull the cable to plug in or plug out.

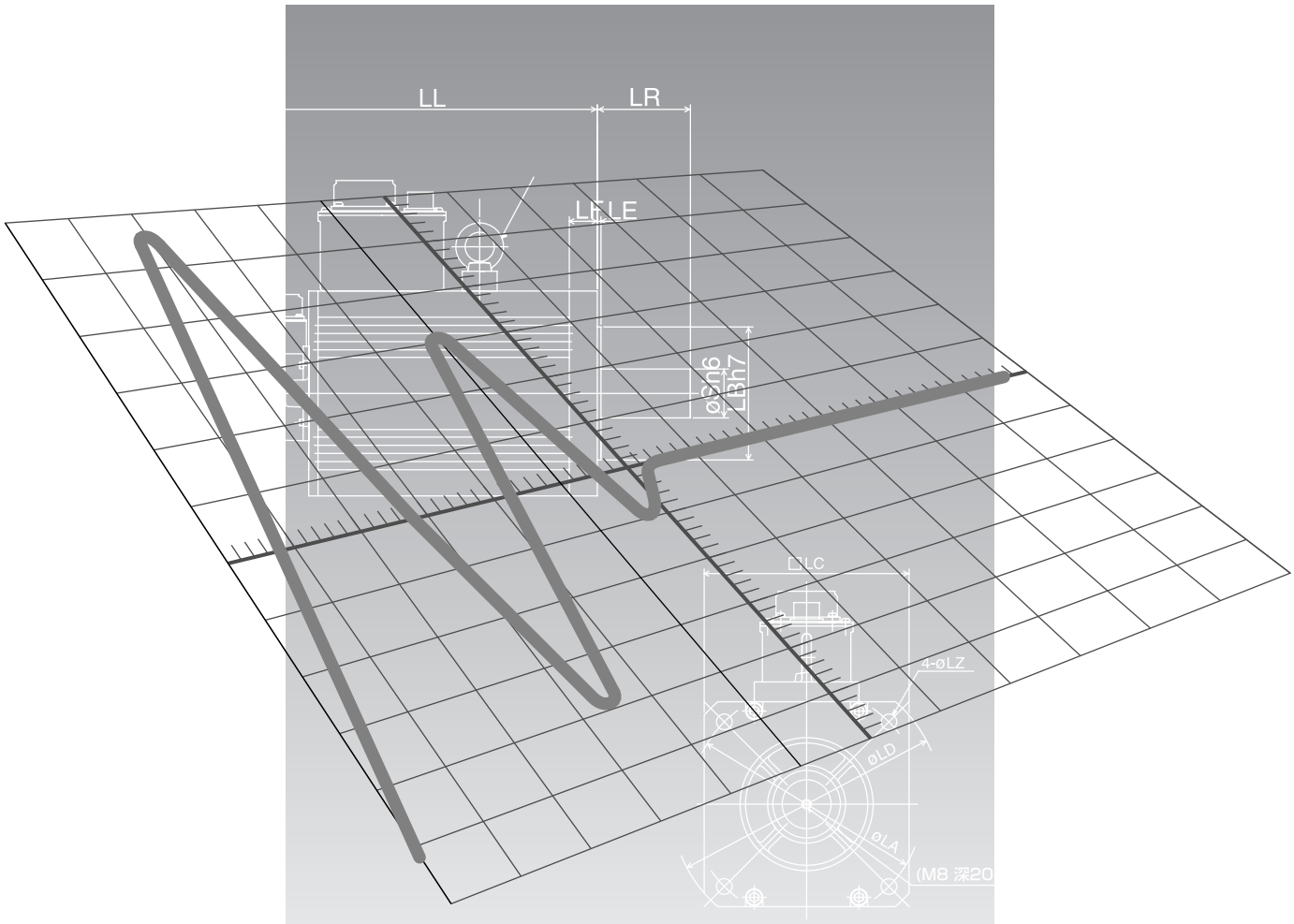

[Preparation]

page

System Configuration and Wiring 28

Overall Wiring (Connecting Example of C-frame, 3-phase) 28
Overall Wiring (Connecting Example of E-frame) 30
Driver and List of Applicable Peripheral Equipments 32
Wiring of the Main Circuit (A to D-frame) 34
Wiring of the Main Circuit (E and F-frame) 35
Wiring to the Connector, CN X6 (Connection to Encoder) 38
Wiring to the Connector, CN X3 and 4
Wiring to the Connector, CN X7 (Connection to External Scale) 40
Wiring to the Connector, CN X5 (Connection to Host Controller) 41
Wiring for Connector CN X5 42
Interface Circuit 43
List of Signal for Connector CN X5 44

Setup with the Front Panel 48

Composition of Touch Panel and Display 48
Initial Status of the Front Panel Display (7-Segment LED) 48
Output Signals (Analog) and Their Functions 49

Built-in Holding Brake 50

Dynamic Brake 52

System Configuration and Wiring

Overall Wiring (Connecting Example of C-frame, 3-phase)

• Wiring of the Main Circuit (see P.34, 35.)

Circuit Breaker (NFB) (see P.32, 33 and 177.)
Use the circuit breaker matching capacity of the power source to protect the power lines.˜
˜

Noise Filter (NF) (see P.177 , 178.)
Prevents external noise from the power lines. And reduces an effect of the noise generated by the servo driver. ˜
˜

Magnetic Contactor (MC) (see P.32, 33.)
Turns on/off the main power of the servo driver.˜
Use a surge absorber together with this.˜
• **Never start nor stop the servo motor with this Magnetic Contactor.**
˜

Reactor (L) (see P.189.)
Reduces harmonic current of the main power.

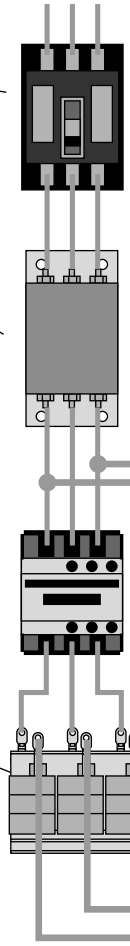

• **Connection to the Connector, CN X1**
(connection to input power)˜
<Remarks>
Before turning the power ˜ supply on, check whether ˜ the input voltage is correct.

L1 (Pin-5)
L2 (Pin-4)
L3 (Pin-3)
L1C (Pin-2)
L2C (Pin-1)

Pin RB1 (6-pin), RB2 (4-pin), and RB3 (5-pin)
RB2 and RB3 to be kept shorted for ˜ normal operation. ˜

• **When the capacity shortage of the regenerative resister is found, disconnect a shorting bar between RB2 and RB3,** then connect **the external regenerative resister between RB1 and RB2.**
(Note that no regenerative resister is equipped in Frame A and B type. **Install an external regenerative resister on incombustible material, such as metal.** Follow the same ˜ wiring connection as the above.)˜

• When you connect an external regenerative resister, set up SV.Pr6C to 1 or 2.

• **Connection to the Connector, CN X2**
(connection to external components)
RB1 (Pin-6)
RB2 (Pin-4)

Handle lever˜
Use this for connector connection. Store this after connection for other occasions. ˜
(see page for connection.)

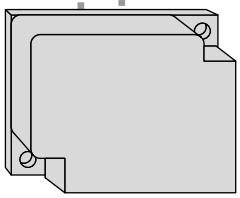

Regenerative resistor (optional)
<Remarks>
• When you use an external regenerative resister, install an external protective apparatus, such as thermal fuse without fail.˜
• Thermal fuse and thermostat are built in to the regenerative resistor (Option). If the thermal fuse is activated, it will not resume.

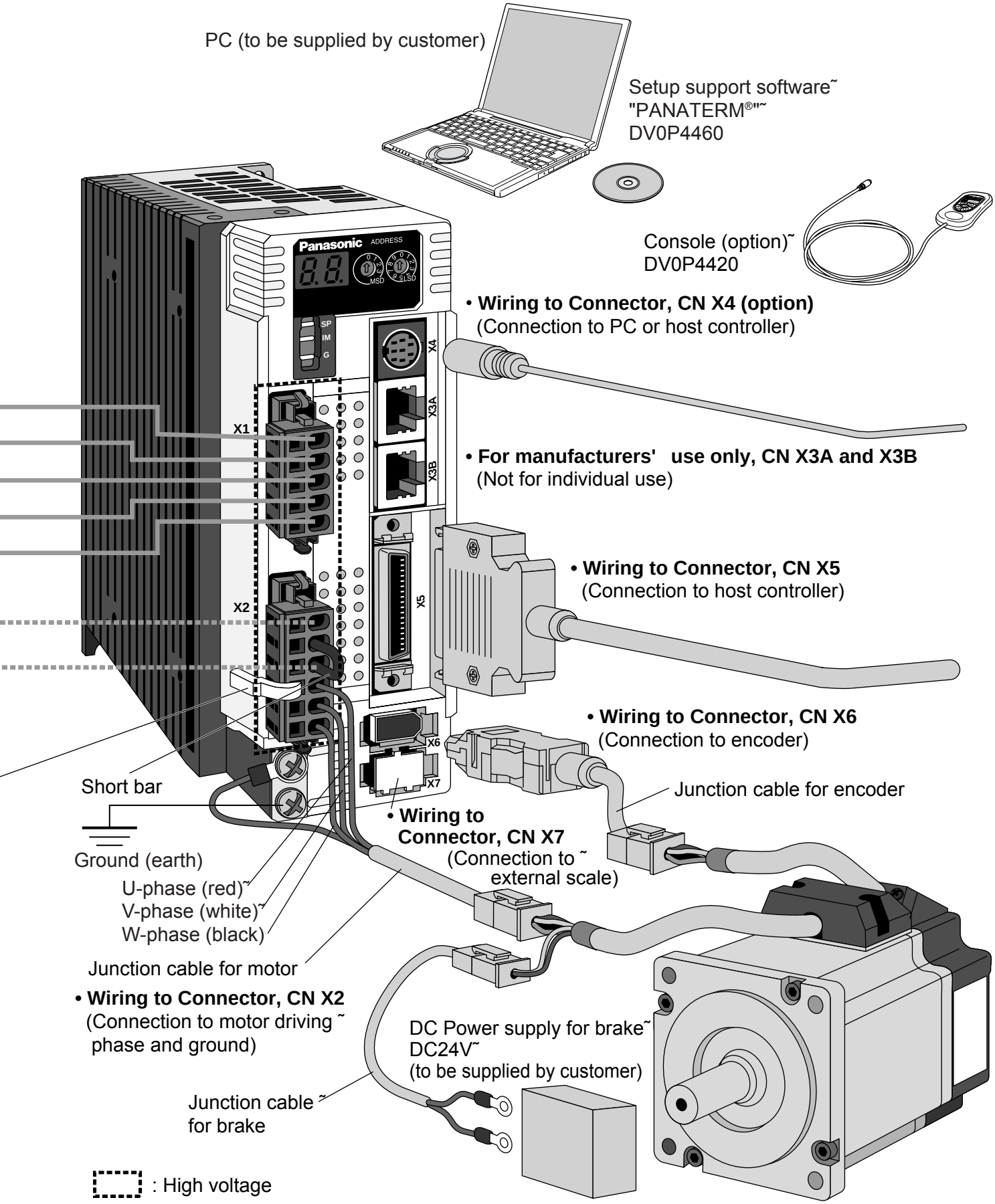
PC (to be supplied by customer)
Setup support software˜
"PANATERM®"˜
DV0P4460
Console (option)˜
DV0P4420
Panasonic
ADDRESS
MSD
LSD
SP
IM
G
X1
X2
X4
X3A
X3B
X5
X6
X7
• Wiring to Connector, CN X4 (option)
(Connection to PC or host controller)
• For manufacturers' use only, CN X3A and X3B
(Not for individual use)
• Wiring to Connector, CN X5
(Connection to host controller)
• Wiring to Connector, CN X6
(Connection to encoder)
Junction cable for encoder
Short bar
Ground (earth)
• Wiring to Connector, CN X7
(Connection to ˜ external scale)
U-phase (red)˜
V-phase (white)˜
W-phase (black)
Junction cable for motor
• Wiring to Connector, CN X2
(Connection to motor driving ˜ phase and ground)
DC Power supply for brake˜
DC24V˜
(to be supplied by customer)
Junction cable ˜ for brake
: High voltage

System Configuration and Wiring

Overall Wiring (Connecting Example of E-frame)

• Wiring of the Main Circuit (see P.36, 37.)

Circuit Breaker (NFB) (see P.32, 33 and 177.)
Use the circuit breaker matching capacity of the power source to protect the power lines.˜
˜

Noise Filter (NF) (see P.177 , 178.)
Prevents external noise from the power lines. And reduces an effect of the noise generated by the servo driver. ˜
˜

Magnetic Contactor (MC) (see P.32, 33.)
Turns on/off the main power of the servo driver.˜
Use a surge absorber together with this.˜
• Never start nor stop the servo motor with this Magnetic Contactor.
˜

Reactor (L) (see P.189.)
Reduces harmonic current of the main power.

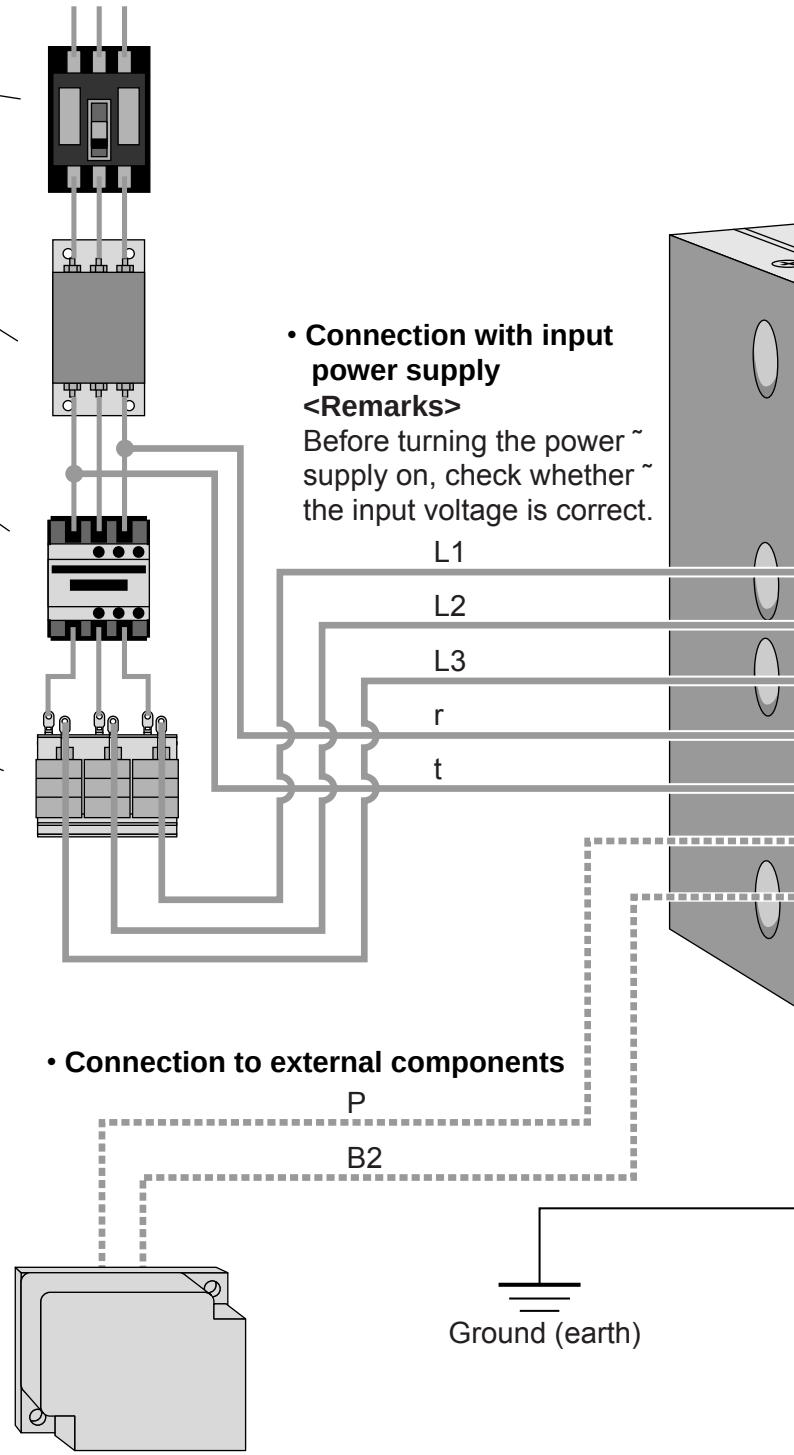

• Connection with input power supply
<Remarks>
Before turning the power ˜ supply on, check whether ˜ the input voltage is correct.

• Connection to external components

Pin P, B1 and B2...
B1 and B2 to be kept shorted for normal operation. ˜

- **When the capacity shortage of the regenerative resister is found, disconnect a short bar between B1 and B2,** then connect **the external regenerative resister** between P and B2.˜
  Install an external regenerative resister on incombustible material, such as metal. Follow the same wiring connection as the above. ˜
- When you connect an external regenerative resister, set up SV.Pr6C to 1 or 2.

Regenerative resistor (optional)
<Remarks>
When you use an external regenerative resister, install an external protective apparatus, such as thermal fuse without fail.˜
Thermal fuse and thermostat are built in to the regenerative resistor (Option). If the thermal fuse is activated, it will not resume.

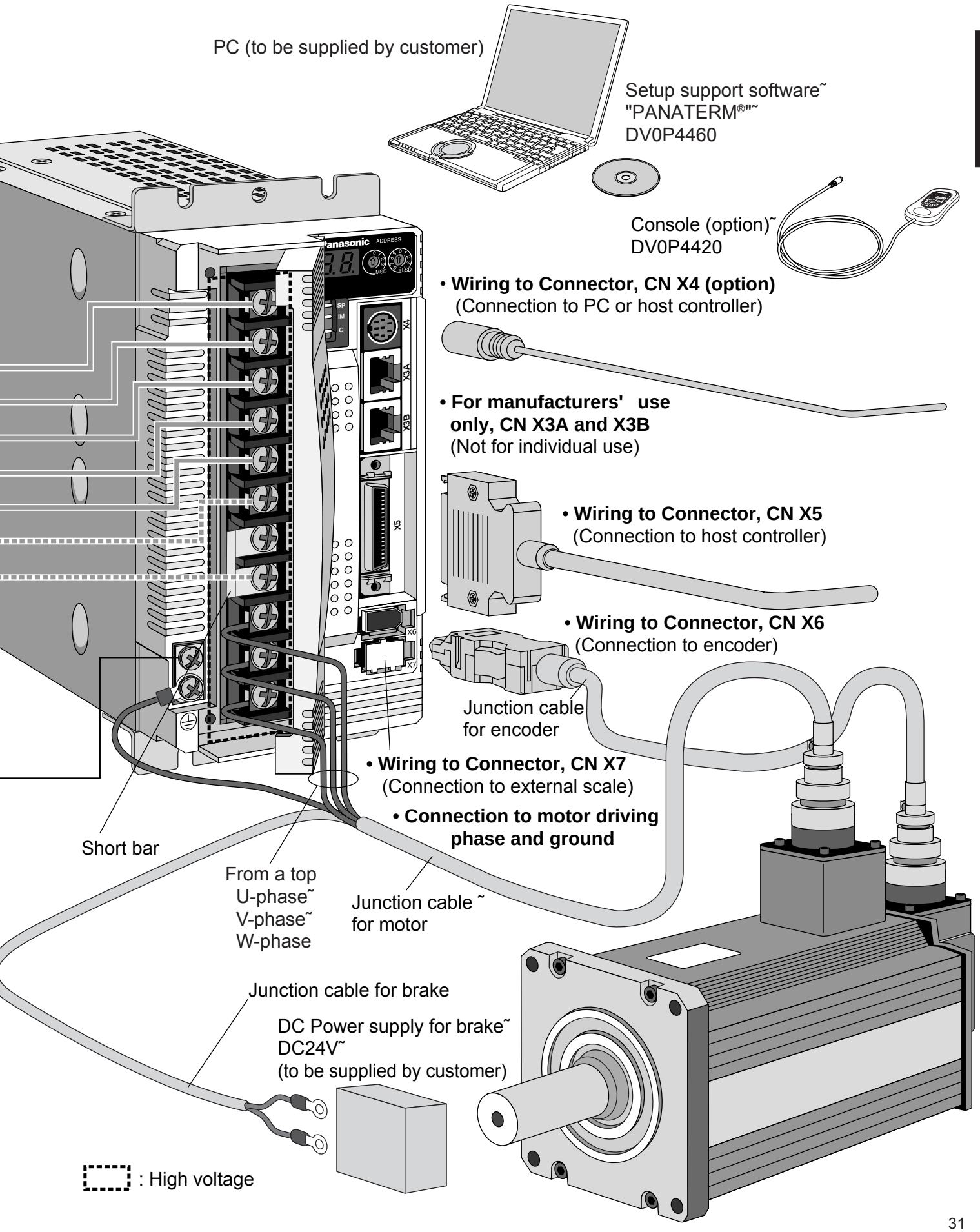
PC (to be supplied by customer)
Setup support software˜
"PANATERM®II"˜
DV0P4460
Console (option)˜
DV0P4420
• Wiring to Connector, CN X4 (option)
(Connection to PC or host controller)
• For manufacturers' use only, CN X3A and X3B
(Not for individual use)
• Wiring to Connector, CN X5
(Connection to host controller)
• Wiring to Connector, CN X6
(Connection to encoder)
Junction cable for encoder
• Wiring to Connector, CN X7
(Connection to external scale)
• Connection to motor driving phase and ground
Short bar
From a top
U-phase˜
V-phase˜
W-phase
Junction cable ˜ for motor
Junction cable for brake
DC Power supply for brake˜
DC24V˜
(to be supplied by customer)
: High voltage

System Configuration and Wiring

Driver and List of Applicable Peripheral Equipments

Driver	Applicable motor	Voltage	Rated output	Required Power (at the rated load)	Circuit breaker (rated current)	Noise filter	Surge absorber	Noise filter for signal	Magnetic contactor	Cable diameter (main circuit)	Cable diameter (control circuit)	Connection
MADD~	MSMD~	Single~ phase,~ 100V~	50W~ –100W~	approx.~ 0.4kVA~	10A~	DV0P4170~	DV0P4190~	DV0P1460	BMFT61041N~ (3P+1a)~	0.75 to~ 2.0mm2~ AWG~ 14 to 18~	0.75mm2~ AWG18~	Connection to exclusive connector
	MQMA~		100W~	approx.~ 0.4kVA~								
	MSMD~	Single~ phase,~ 200V~	50W~ –200W~	approx.~ 0.5kVA~					BMFT61542N~ (3P+1a)~			
	MQMA~		100W~	approx.~ 0.3kVA~								
			200W~	approx.~ 0.5kVA~								
	MAMA~		100W~	approx.~ 0.3kVA~								
MBDD~	MSMD~	Single~ phase,~ 100V~	200W~	approx.~ 0.5kVA~					BMFT61041N~ (3P+1a)~			
	MQMA~											
	MSMD~	Single~ phase,~ 200V~	400W~	approx.~ 0.9kVA~					BMFT61542N~ (3P+1a)~			
	MQMA~											
	MAMA~		200W~	approx.~ 0.5kVA~								
MCDD~	MQMA~	Single~ phase,~ 100V~	400W~	approx.~ 0.9kVA~		DV0P4180~			BMFT61541N~ (3P+1a)~			
	MSMD~											
		Single/~ 3- phase,~ 200V~	750W~	approx.~ 1.3kVA~	15A~				BMFT61542N~ (3P+1a)~			
	MAMA~		400W~	approx.~ 0.9kVA~								
	MFMA~											
	MHMA~		500W~	approx.~ 1.1kVA~								
MDDD~	MAMA~	Single/~ 3- phase,~ 200V~	750W~	approx.~ 1.6kVA~		DV0P4220	DV0P1450		BMFT61842N~ (3P+1a)~	2.0mm2~ AWG14~		
	MDMA~		1.0kW~	approx.~ 1.8kVA~								
	MHMA~											
	MGMA~		900W~	approx.~ 1.8kVA~	20A~							
	MSMA~		1.0kW~	approx.~ 1.8kVA~								
	MHMA~		1.5kW~	approx.~ 2.3kVA~								
	MDMA~											
	MSMA~											
	MFMA~											
MEDD	MDMA~	3- phase,~ 200V	2.0kW~	approx.~ 3.3kVA~	30A				BMF6352N~ (3P+2a2b)	2.0mm2~ AWG14~		Terminal~ block~ M5 11.0 or~ smaller ø5.3
	MSMA~											
	MHMA~											
	MFMA		2.5kW	approx.~ 3.8kVA~						3.5mm2~ AWG12		

Driver	Applicable motor	Voltage	Rated output	Required Power (at the rated load)	Circuit breaker (rated current)	Noise filter	Surge absorber	Noise filter for signal	Magnetic contactor	Cable diameter (main circuit)	Cable diameter (control circuit)	Connection
MFDD	MGMA	3- phase, 200V	2.0kW	approx. 3.8kVA	50A	DV0P3410	DV0P1450	DV0P1460	BMF6352N (3P+2a2b)	3.5mm² AWG12	0.75mm² AWG18	Terminal block M5 11.0 or smaller ø5.3
	MDMA											
	MHMA											
	MSMA		3.0kW	approx. 4.5kVA								
	MGMA											
	MDMA		4.0kW	approx. 6kVA					BMF6652N (3P+2a2b)			
	MHMA											
	MSMA											
	MFMA		4.5kW	approx. 6.8kVA						5.3mm² AWG10		
	MGMA			approx. 7.5kVA								
	MDMA		5.0kW	approx. 7.5kVA								
	MHMA											
	MSMA											

- Select a single and 3-phase common specifications according to the power source.
- Manufacturer of circuit breaker and magnetic contactor : Matsushita Electric Works.
  To comply to EC Directives, install a circuit breaker between the power and the noise filter without fail, and the circuit breaker should conform to IEC Standards and UL recognized (Listed and ㊀ marked).
  5000Arms, 240V is the maximum capacity to be delivered to the circuit of 750W or larger model when the maximum current value of the circuit breaker is limited to 20A.
- For details of noise filters, refer to P.177, 178, "Noise Filter" and P.179, "Driver and List of Applicable Peripheral Equipments (EC Directives)" of Supplement.

<Remarks>

- Select and use the circuit breaker and noise filter with matching capacity to those of the power source, considering the load conditions as well.
- Terminal block and protective earth terminal
  Use a copper conductor cable with temperature rating of 60°C or higher.
  Protective earth terminal is M4 for A to D-frame, and M5 for E and F-frame.
  Larger tightening torque of the screw than the max. value (M4 : 1.2 N·m, M5 : 2.0 N·m) may damage the terminal block.
- Earth cable diameter should be 2.0mm² (AWG14) or larger for 50W to 2.0kW model, and 3.5mm² (AWG12) or larger for 2.5kW to 4.0kW, and 5.3mm² (AWG10) or larger for 4.5kW to 5kW model.
- Use the attached exclusive connectors for A to D-frame, and maintain the peeled off length of 8 to 9mm.
- Tightening torque of the screws for connector (CN X5) for the connection to the host to be 0.3 to 0.35 N·m.
  Larger tightening torque than these may damage the connector at the driver side.

System Configuration and Wiring

Wiring of the Main Circuit (A to D-frame)

- Wiring should be performed by a specialist or an authorized personnel.
- Do not turn on the power until the wiring is completed.

Tips on Wiring

1) Peel off the insulation cover of the cable.
   (Observe the dimension as the right fig. shows.)

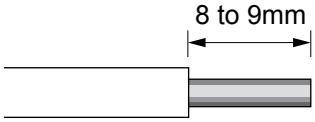

2) Insert the cable to the connector detached
   from the driver. (See P.37 for details.)

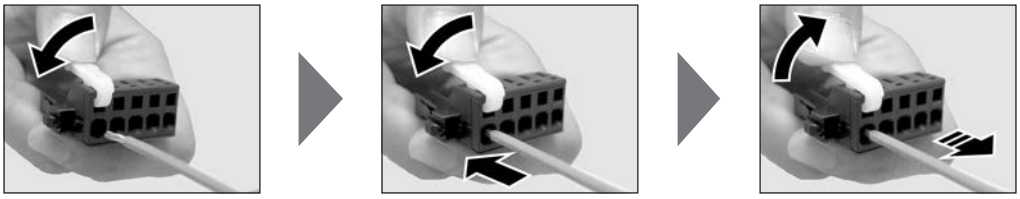

3) Connect the wired connector to the driver.

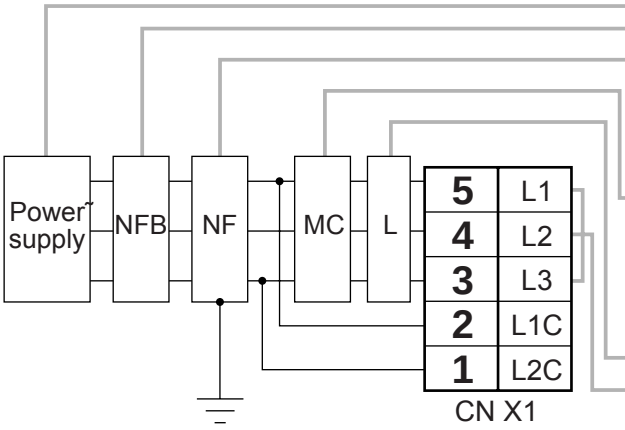

- Check the name plate of the driver for power specifications.
- Provide a circuit breaker, or a leakage breaker. The leakage breaker to be the one designed for "Inverter" and is equipped with countermeasures for harmonics.
- Provide a noise filter without fail.
- Provide a surge absorber to a coil of the Magnetic Contactor. **Never start/stop the motor with this Magnetic Contactor.**
- Connect a fuse in series with the surge absorber. Ask the manufacturer of the Magnetic Contactor for the fuse rating.
- Provide an AC Reactor.
- **Connect L1 and L1C, and L3 and L2C at single phase use (100V and 200V), and don' t use L2.**

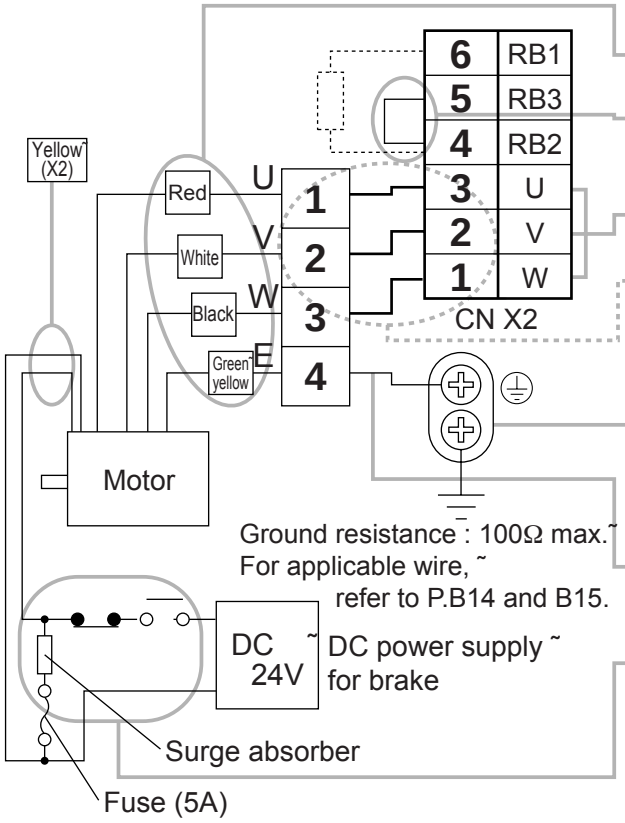

- Match the colors of the motor lead wires to those of the corresponding motor output terminals (U,V,W).
- Don't disconnect the shorting cable between RB2 and RB3 (C and D frame type). Disconnect this only when the external regenerative register is used.
- **Avoid shorting and ground fault. Don' t connect the main power.**

***Connect pin 3 of the connector on the driver side with pin 1 of the connector on the motor side.**

- **Earth-ground this.**
- Connect the protective earth terminal (⏚) of the driver and the protective earth (earth plate) of the control panel without fail to prevent electrical shock.
- Don't co-clamp the earth wires to the protective earth terminal (⏚) . Two terminals are provided.
- **Don' t connect the earth cable to other inserting slot, nor make them touch.**

- Compose a duplex Brake Control Circuit so that the brake can also be activated by an external emergency stop signal.
- The Electromagnetic Brake has no polarity.
- For the capacity of the electromagnetic brake and how to use it, refer to P.50, "Specifications of Built-in Holding Brake".
- Provide a surge absorber.
- Connect a 5A fuse in series with the surge absorber.

Wiring Diagram

Compose the circuit so that the main circuit power will be shut off when an error occurs.

In Case of Single Phase, 100V (A and B-frame)

Power supply Single phase, 100V $^{+10\%}_{-15\%}$ to 115V $^{+10\%}_{-15\%}$

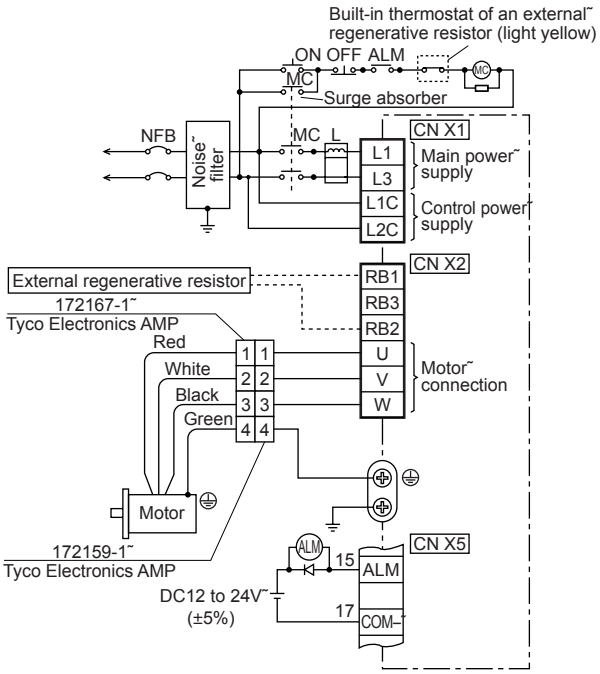

In Case of Single Phase, 200V (A and B-frame)

Power supply Single phase, 200V $^{+10\%}_{-15\%}$ to 240V $^{+10\%}_{-15\%}$

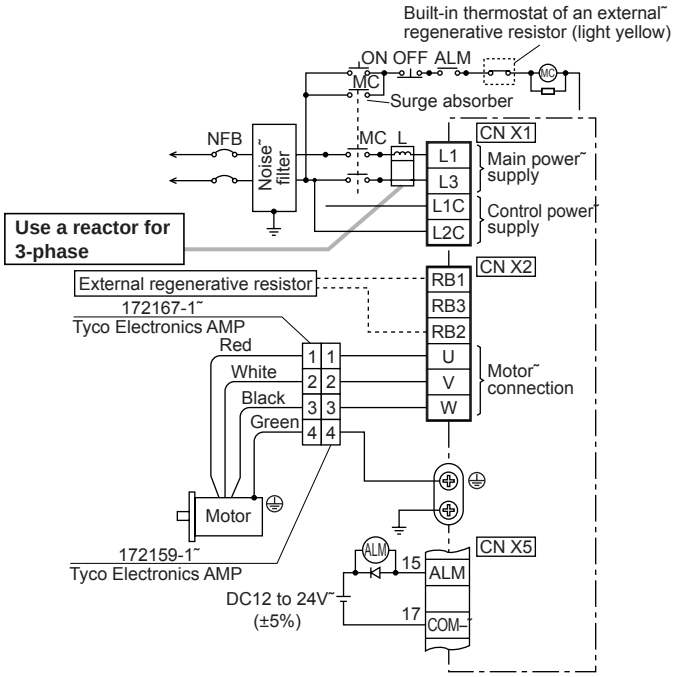

In Case of Single Phase, 200V (C and D-frame)

Power supply Single phase, 200V $^{+10\%}_{-15\%}$ to 240V $^{+10\%}_{-15\%}$

<Remarks>
When you use single phase, connect the main power between L1 and L3 terminals.

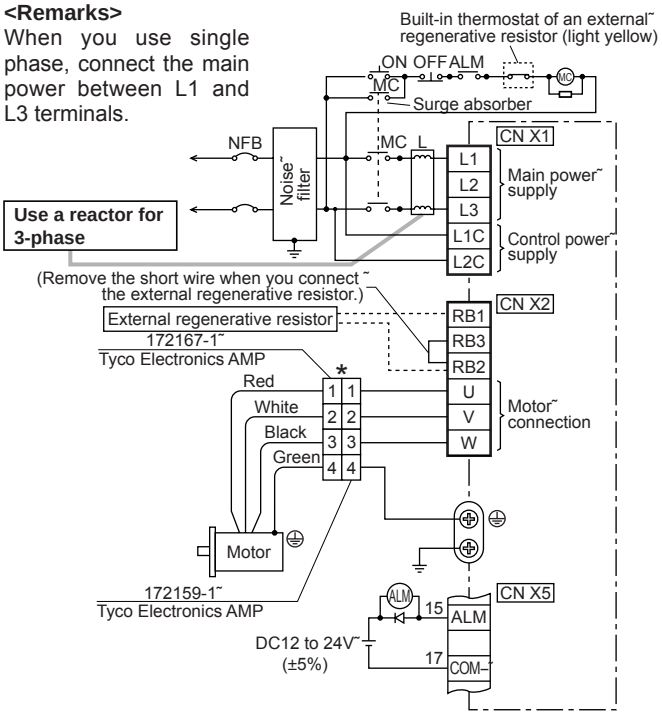

In Case of 3-Phase, 200V (C and D-frame)

Power supply 3-phase, 200V $^{+10\%}_{-15\%}$ to 240V $^{+10\%}_{-15\%}$

<Remarks>
When you use single phase, connect the main power between L1 and L3 terminals.

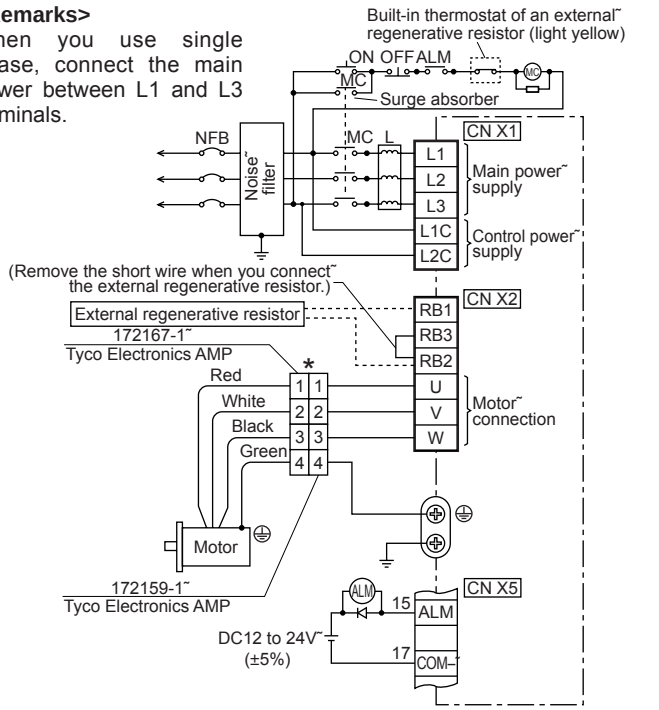

* When you use motor model of MSMA, MDMA, MFMA, MHMA and MGMA, use the connections as the below table shows.

[Motor portion]
Connector : by Japan Aviation Electronics Ind.

<Remark>
Do not connect anything to NC.

JL04V-2E20-4PE-B-R
JL04HV-2E22-22PE-B-R

PIN No.	Application
A	U-phase
B	V-phase
C	W-phase
D	Ground

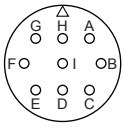

JL04V-2E20-18PE-B-R

PIN No.	Application
G	Brake
H	Brake
A	NC
F	U-phase
I	V-phase
B	W-phase
E	Ground
D	Ground
C	NC

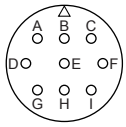

JL04V-2E24-11PE-B-R

PIN No.	Application
A	Brake
B	Brake
C	NC
D	U-phase
E	V-phase
F	W-phase
G	Ground
H	Ground
I	NC

System Configuration and Wiring

Wiring of the Main Circuit (E and F-frame)

- Wiring should be performed by a specialist or an authorized personnel.
- Do not turn on the power until the wiring is completed.

Tips on Wiring

1) Take off the cover fixing screws, and detach the terminal cover.
2) Make wiring
   Use clamp type terminals of round shape with insulation cover for wiring to the terminal block. For cable diameter and size, rater to "Driver and List of Applicable Peripheral Equipments" (P.B14 and B15).
3) Attach the terminal cover, and fix with screws.
   Fastening torque of cover fixed screw in less than 0.2 N•m.

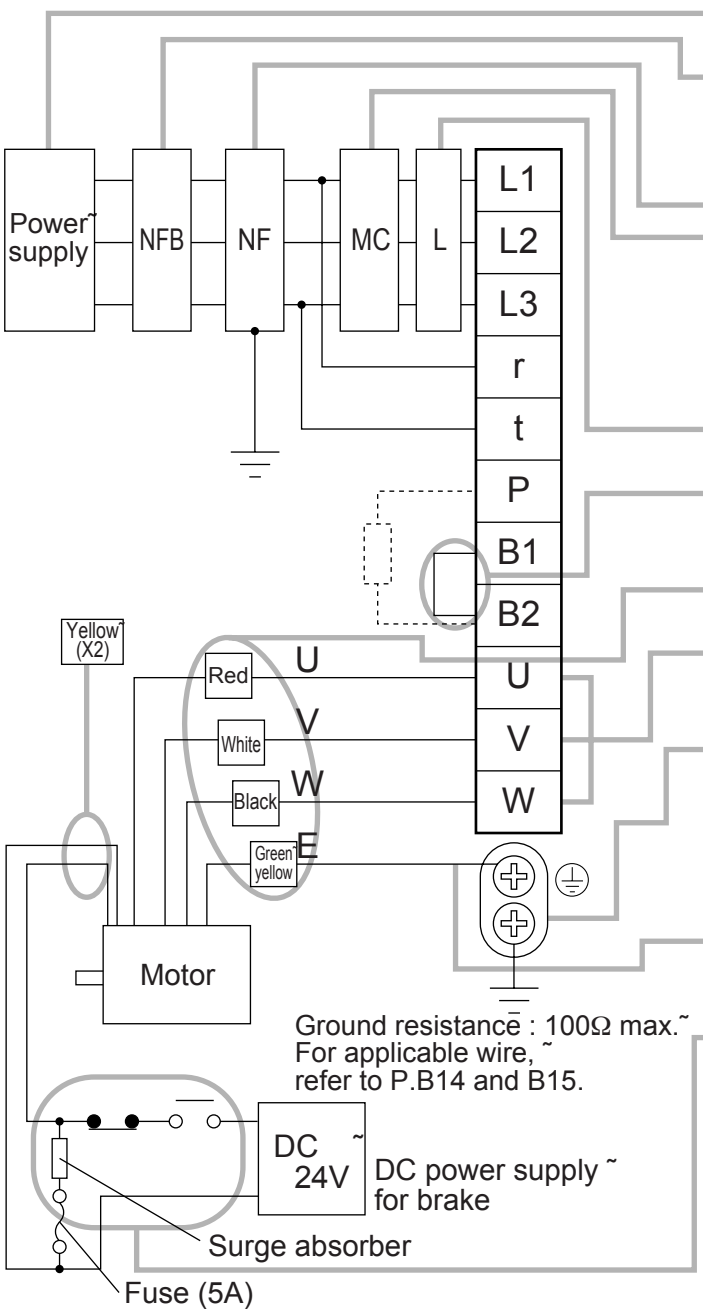

- Check the name plate of the driver for power specifications.
- Provide a circuit breaker, or a leakage breaker. The leakage breaker to be the one designed for "Inverter" and is equipped with countermeasures for harmonics.
- Provide a noise filter without fail.
- Provide a surge absorber to a coil of the Magnetic Contactor. **Never start/stop the motor with this Magnetic Contactor.**
  Connect a fuse in series with the surge absorber. Ask the manufacturer of the Magnetic Contactor for the fuse rating.
- Provide an AC Reactor.

- Don't disconnect the short bar between B1 and B2. Disconnect this only when an external regenerative register is used.
- Match the colors of the motor lead wires to those of the corresponding motor output terminals (U,V,W).
- **Avoid shorting and ground fault.**
  Don' t connect the main power.

- **Earth-ground this.**
- Connect the protective earth terminal (⏚) of the driver and the protective earth (earth plate) of the control panel without fail to prevent electrical shock.
- Don't co-clamp the earth wires to the protective earth terminal (⏚) . Two terminals are provided.
- **Don' t connect the earth cable to other inserting slot, nor make them touch.**

- Compose a duplex Brake Control Circuit so that the brake can also be activated by an external emergency stop signal.
- The Electromagnetic Brake has no polarity.
- For the capacity of the electromagnetic brake and how to use it, refer to P.50, "Specifications of Built-in Holding Brake".
- Provide a surge absorber.
  Connect a 5A fuse in series with the surge absorber.

Wiring Diagram

Compose the circuit so that the main circuit power will be shut off when an error occurs.

In Case of 3-Phase, 200V (E and F-frame)

Power supply 3-phase, 200V $^{+10\%}_{-15\%}$ to 230V $^{+10\%}_{-15\%}$

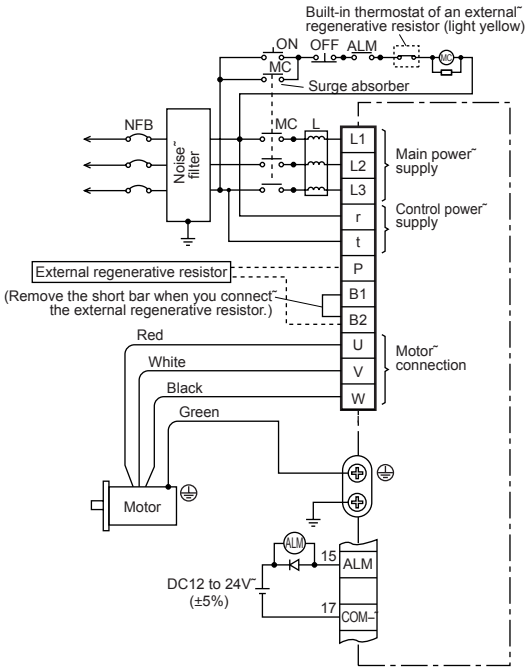

[Motor portion]
Connector : by Japan Aviation Electronics Ind.

JL04V-2E20-4PE-B-R
JL04HV-2E22-22PE-B-R

PIN No.	Application
A	U-phase
B	V-phase
C	W-phase
D	Ground

JL04V-2E20-18PE-B-R

PIN No.	Application
G	Brake
H	Brake
A	NC
F	U-phase
I	V-phase
B	W-phase
E	Ground
D	Ground
C	NC

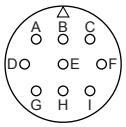

JL04V-2E24-11PE-B-R

PIN No.	Application
A	Brake
B	Brake
C	NC
D	U-phase
E	V-phase
F	W-phase
G	Ground
H	Ground
I	NC

<Remark>
Do not connect anything to NC.

Wiring method to connector (A to D-frame)

• Follow the procedures below for the wiring connection to the Connector CN X1 and X2.

How to connect

1. Peel off the insulation cover of the cable. (see the right fig for exact length for peeling.)
2. Insert the cable to the connecter in the following 2 methods.
   (a) Using the attached Handle Lever
   (b) Using a screw driver (blade width of 3.0 to 3.5 mm)

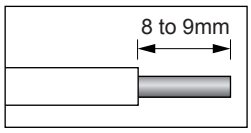

(a) Using handle lever

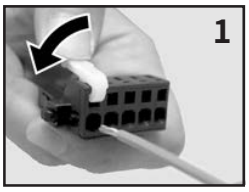

Attach the handle lever to the handling slot on the upper portion. Press down the lever to push down the spring.

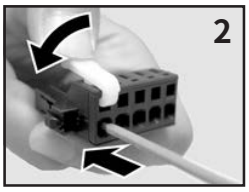

Insert the peeled cable while pressing down the lever, until it hits the insertion slot (round hole).

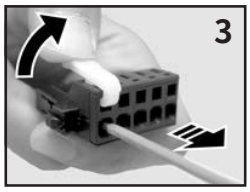

Release the lever.

* You can pull out the cable by pushing down the spring as the above.

(b) Using screw driver

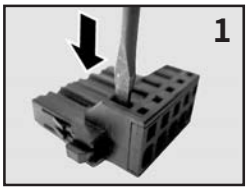

Press the screw driver to the handling slot on the upper portion to push down the spring.

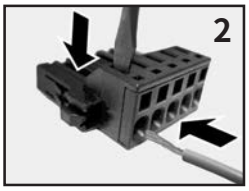

Insert the peeled cable while pressing down the screw driver, until it hits the insertion slot (round hole).

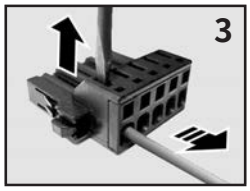

Release the screw driver.

* You can pull out the cable by pushing down the spring as the above.

<CAUTION>
- Peel off the cable with exact length (8 to 9 mm).
- Take off the connector from the Servo Driver before making connection.
- Insert one cable into each one of cable insertion slot.
- Pay attention to injury by screw driver.

System Configuration and Wiring

Wiring to the Connector, CN X6 (Connection to Encoder)

Tips on Wiring

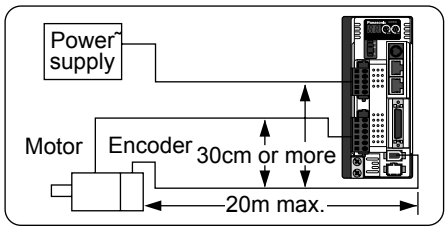

- Maximum cable length between the driver and the motor to be 20m. Consult with a dealer or distributor if you want to use the longer cable than 20m. (Refer to the back cover.)
- Keep this wiring away from the main circuit by 30 cm or more. Don't guide this wiring through the same duct with the main, nor bind them together.

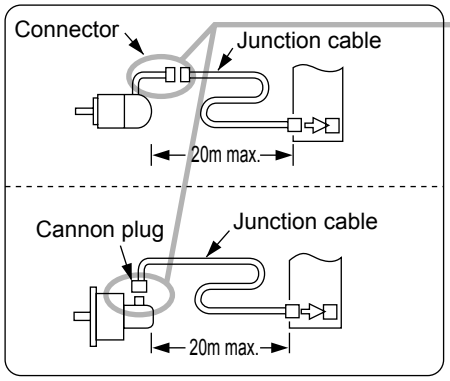

- Encoder outlets are different by the motors, flyer leads + connecter and cannon plug type.
- When you make your own encoder junction cable (for connectors, refer to P.186, "Options (Connector Kit for Motor and Encoder connection)" of Supplement.
  1) Refer to the Wiring Diagram below.
  2) Cable to be : Shielded twisted pair cable with core diameter of 0.18mm² or larger (AWG24), and with higher bending resistance.

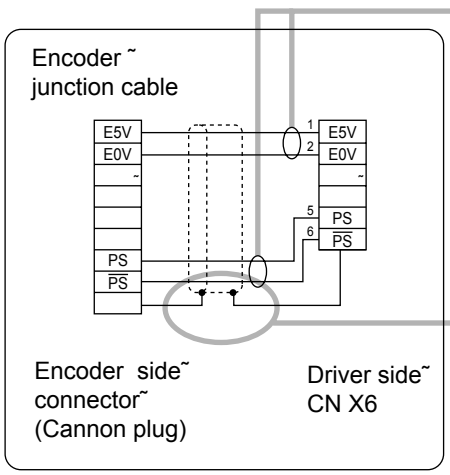

  3) Use twisted pair cable for corresponding signal/power wiring.
  4) Shielding treatment
     - Shield wall of the driver side : Connect to Pin-20 (FG) of CN X6.
     - Shield wall of the motor side :
       Tyco Electronics AMP
       In case of 9-pin (17-bit absolute/incremental encoder) : Connect to pin-3.
       In case of 6-pin (2500P/r incremental encoder) : Connect to pin-6.
       In case of cannon plug, connect to Pin-J.
  5) Connect nothing to the empty terminals of each connector and Cannon Plug.

Wiring Diagram

In case of 2500P/r incremental encoder

- **MSMD 50W to 750W**
- **MAMA 100W to 750W**
- **MQMA 100W to 400W**

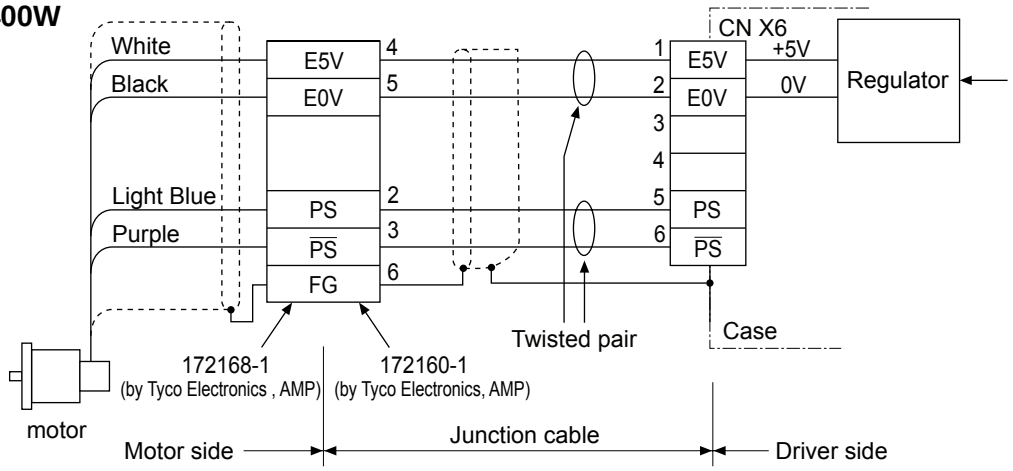

- MSMA 1kW to 5kW
- MDMA 1kW to 5kW
- MHMA 500W to 5kW
- MFMA 400W to 4.5kW
- MGMA 900W to 4.5kW

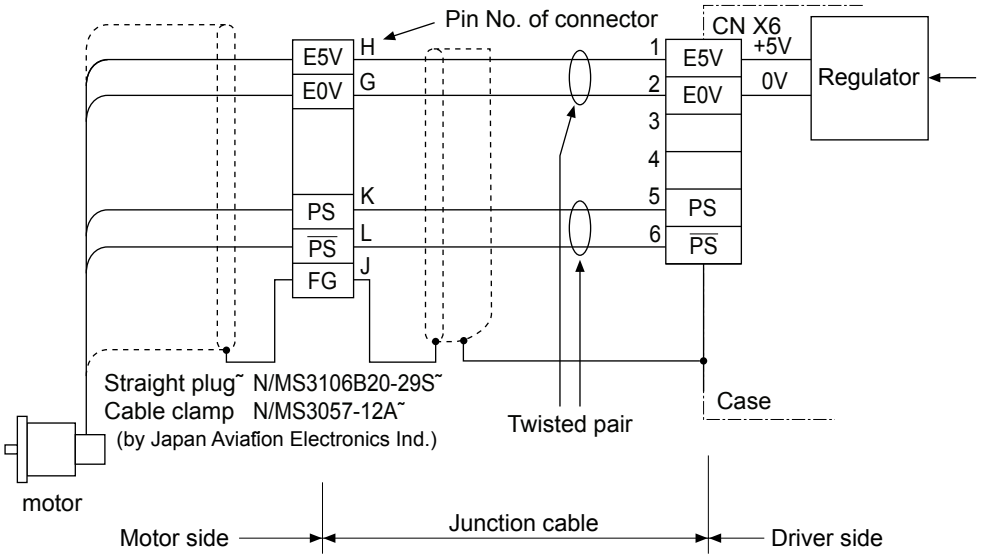

Wiring Diagram

In case of 17-bit absolute/incremental encoder

- MSMD 50W to 750W
- MAMA 100W to 750W
- MQMA 100W to 400W

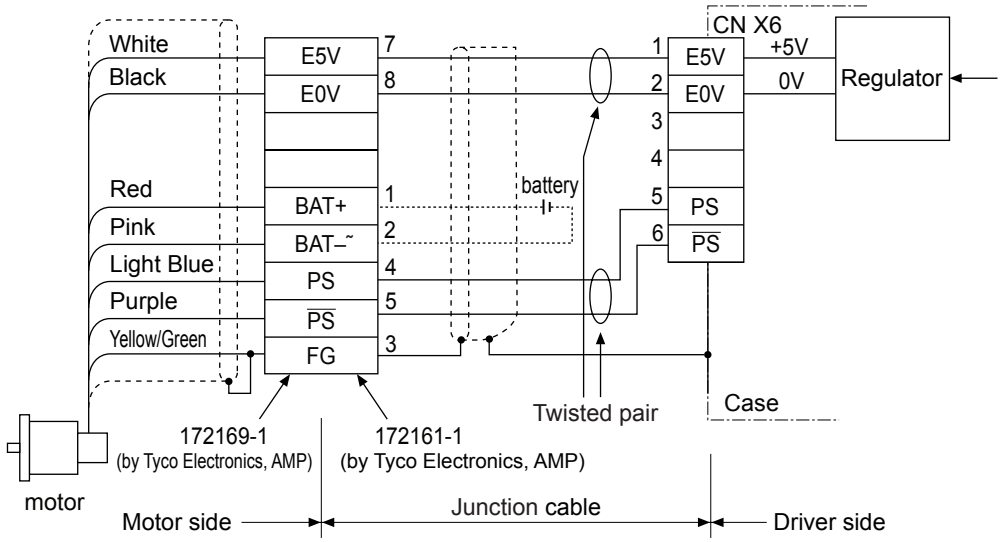

- MSMA 1kW to 5kW
- MDMA 1kW to 5kW
- MHMA 500W to 5kW
- MFMA 400W to 4.5kW
- MGMA 900W to 4.5kW

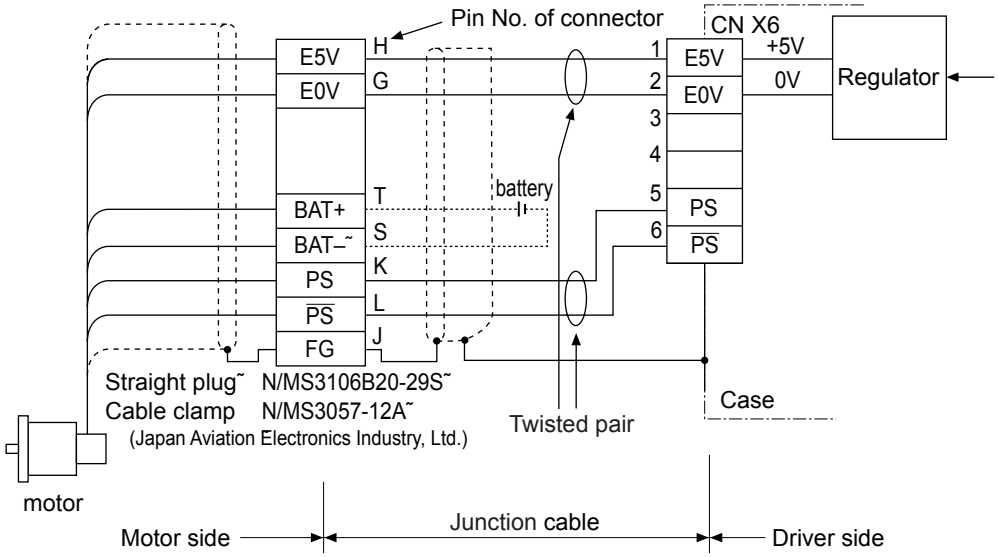

System Configuration and Wiring

Wiring to the Connector, CN X7 (Connection to External Scale)

Power supply for the external scale shall be prepared by customer, or use the following power supply output for the external scale (250mA or less).

Application	Connector PinNo.	Content
Power supply output for external scale	1	EX5V
	2	EX0V
I/F of external scale signals (serial signal)	5	EXPS
	6	$\overline{\text{EXPS}}$
Frame ground	Case	FG

<Note>
EXOV of the external scale power supply output is connected to the control circuit ground which is connected to the Connecter, CN X5.
<Remark>
Do not connect anything to other Pin numbers descried in the above table (Pin-3 and 4).

Cautions

(1) Following external scale can be used for full-closed control.
- AT500 series by Mitutoyo (Resolution 0.05[µm], max. speed 2[m/s])
- ST771 by Mitutoyo (Resolution 0.5[µm], max. speed 2[m/s])

(2) **Recommended external scale ratio is 1/20<External scale ratio<20**

If you set up the external scale ratio to smaller value than 50/position loop gain (SV.Pr10 and 18), you may not be able to control per 1 pulse unit. Setup of larger scale ratio may result in larger noise.

Wiring to the External Scale, Connector, CN X7

Wire the signals from the external scale to the external scale connector, CN X7.

1) Cable for the external scale to be the twisted pair with bundle shielding and to having the twisted core wire with diameter of 0.18mm^2.
2) Cable length to be max. 20m. Double wiring for 5V power supply is recommended when the wiring length is long to reduce the voltage drop effect.
3) Connect the outer film of the shield wire of the external scale to the shield of the junction cable. Also connect the outer film of the shield wire to the shell (FG) of CN X7 of the driver without fail.
4) Separate the wiring to CN X7 from the power line (L1, L2, L3, L1C(r), L2C(t), U, V, W, ⏚) as much as possible (30cm or more). Do not pass these wires in the same duct, nor bundle together.
5) Do not connect anything to the vacant pins of CN X7.
6) Cut away the driver's CN X7 cover.

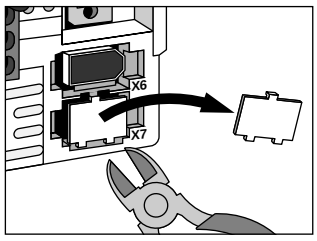

Please cut it out ˜ with nippers etc.

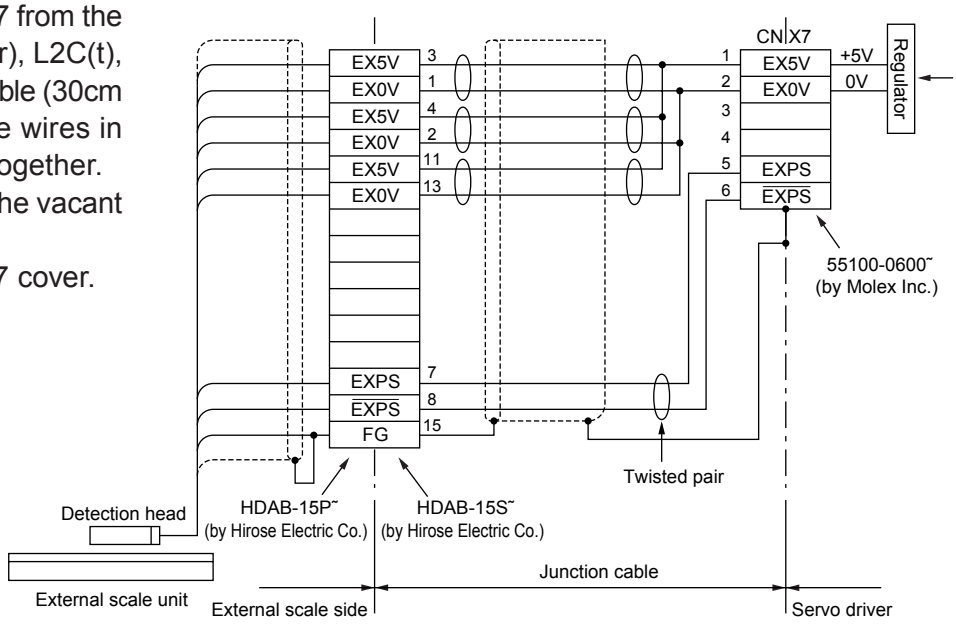

Wiring to the Connector, CN X5 (Connection to Host Controller)

• Tips on wiring

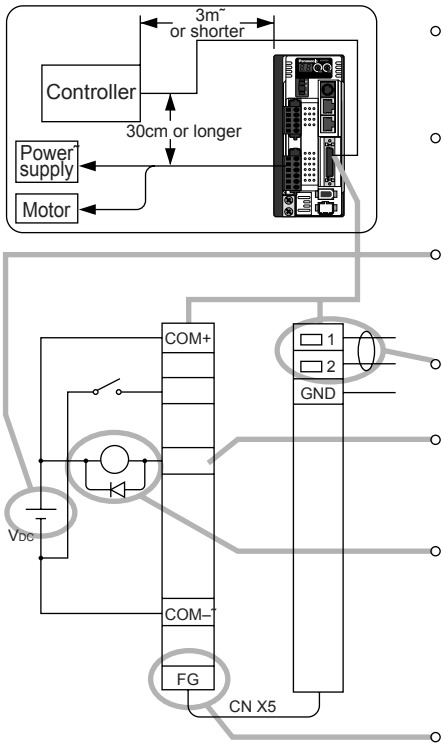

- Peripheral apparatus such as host controller should be located within 3m.
- Separate the main circuit at least 30cm away.
  Don't pass them in the same duct, nor bind them together.
- Power supply for control signals (VCC) between COM+ and COM– (VDC) should be prepared by customer.
- Use shield twisted pair for the wiring of encoder signal output.
- Don't apply more than 24V to the control signal output terminals, nor run 50mA or more to them.
- When the relay is directly driven by the control output signals, install a diode in parallel with a relay, and in the direction as the Fig. shows. The driver might be damaged without a diode installment, or by reverse direction.
- Frame ground (FG) is connected to the earth terminal inside of the driver.

• For detailed information, refer to P.42 to 47.

• Specifications of the Connector, CN X5

Connector at driver side	Connecter to be prepared by customer		Manufacturer
	Part name	Part No.	
52986-3679	Connecter (soldering type)	54306-3611 or 54306-3619 (lead-free)	Molex Inc.
	Connector cover	54331-0361	
	or		
	Connecter (soldering type)	10136-3000VE	Sumitomo 3M
	Connector cover	10336-52A0-008	

<Note>
For details, refer to P.185, "Options" of Supplement.

<Remarks>
- Tightening torque of the screws for connector (CN X5) for the connection to the host to be 0.3 to 0.35N·m. Larger tightening torque than these may damage the connector at the driver side.

Wiring for Connector CN X5

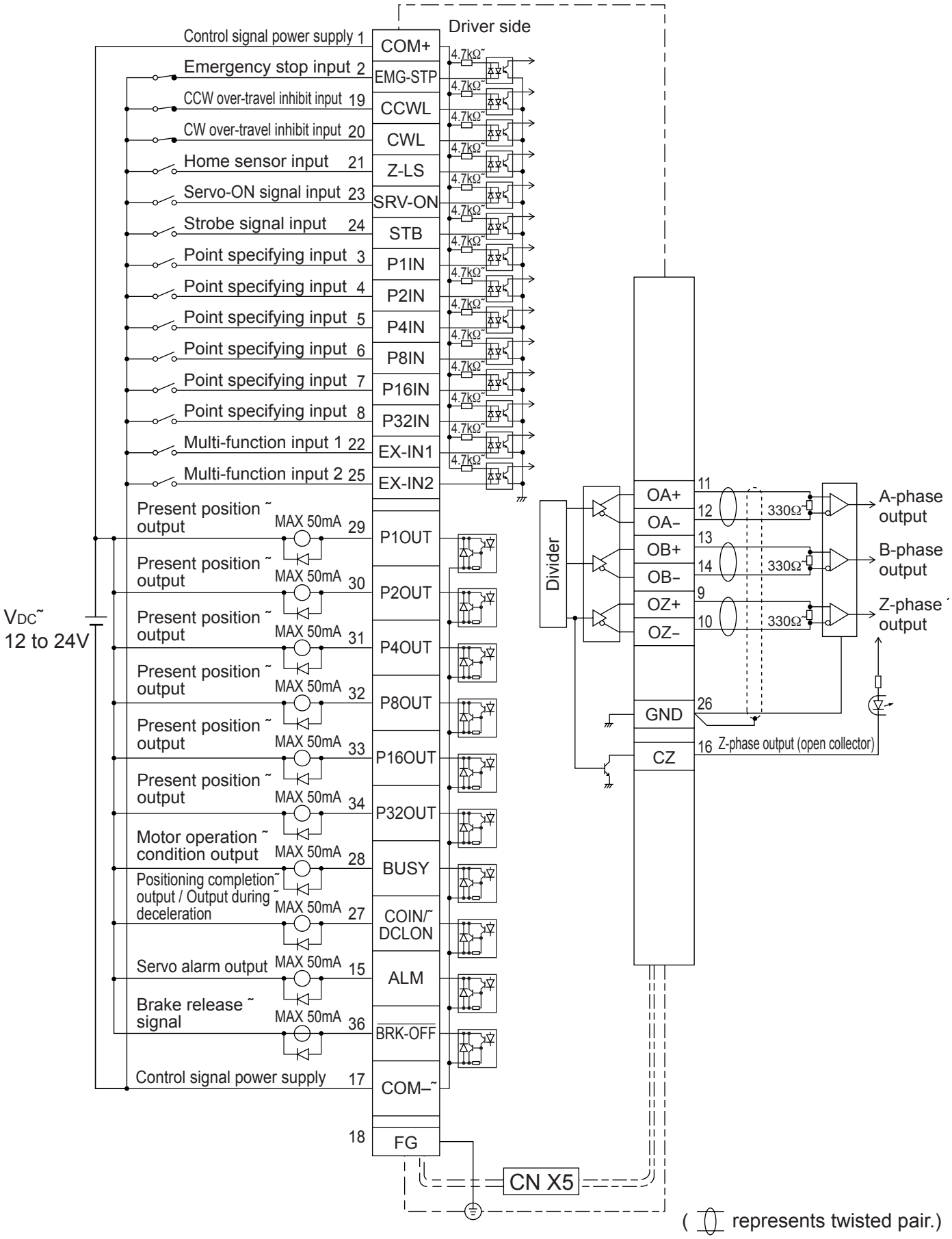

Interface Circuit

Input Circuit

SI Connection to sequence input signals

- Connect to contacts of switches and relays, or open collector output transistors.˜
- When you use contact inputs, use the switches and relays for micro current to avoid contact failure.˜
- Make the lower limit voltage of the power supply (12 to 24V) as 11.4V or more in order to secure the primary current for photo-couplers.

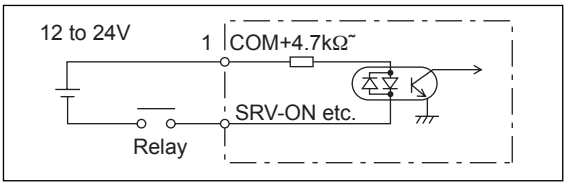

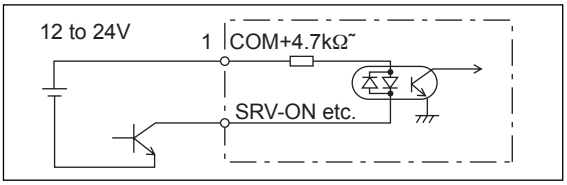

Output Circuit

SO1 Sequence output circuit

- The output circuit is composed of open collector transistor outputs in the Darlington connection, and connect to relays or photo-couplers.˜
- There exists collector to emitter voltage, V_{CE} (SAT) of approx. 1V at transistor-ON, due to the Darlington connection of the output or. Note that normal TTL IC cannot be directly connected since it does not meet VIL.˜
- There are two types of output, one which emitter side of the output transistor is independent and is connectable individually, and the one which is common to – side of the control power supply (COM–).˜
- If a recommended primary current value of the photo-coupler is 10mA, decide the resistor value using the formula of the right Fig.

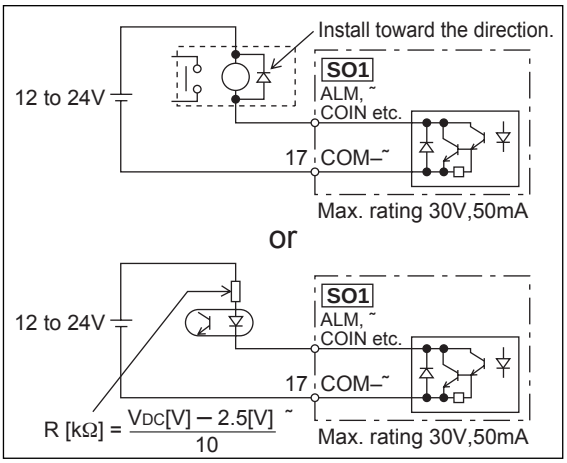

For the recommended primary current value, refer to the data sheet of apparatus or photo-coupler to be used.

PO1 Line driver (Differential output) output

- Feeds out the divided encoder outputs (A, B and Z-phase) in differential through each line driver.˜
- At the host side, receive these in line receiver. Install a terminal resistor (approx. 330Ω) between line receiver inputs without fail. ˜
- These outputs are not insulated.

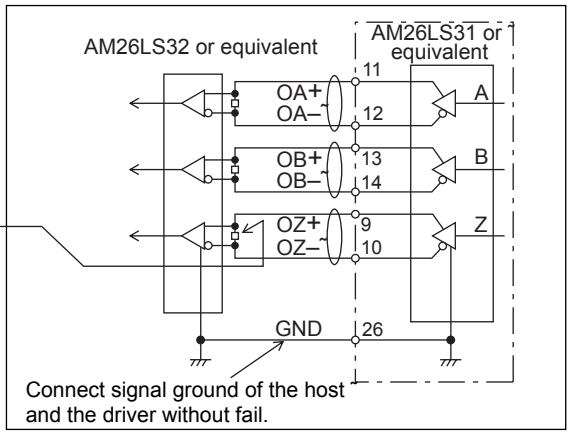

represents twisted pair.

PO2 Open collector output

- Feeds out the Z-phase signal among the encoder signals in open collector. This output is not insulated.˜
- Receive this output with high-speed photo couplers at the host side, since the pulse width of the Z-phase signal is narrow.

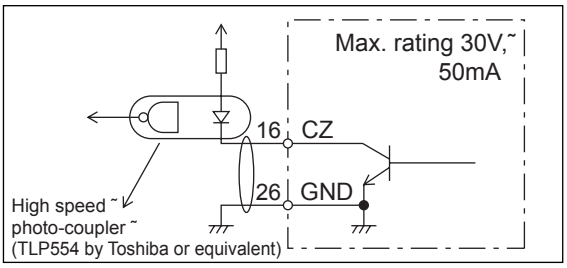

represents twisted pair.

List of Signal for Connector CN X5

Common input signals

Application	Code	Connector pin No.	Function
Control signal power supply	COM+	1	• Connected to the ⊕ terminal of an external DC power supply (12 to 24 V) • Use a 12 V (±5%) to 24 V (±5%) power supply.
	COM–	17	• Connected to the ⊖ terminal of an external DC power supply (12 to 24 V). • The power supply capacity differs depending on the configuration of the input/output circuits used. A capacity of more than 0.5A is recommended.
Emergency stop input	EMG-STP	2	• When connection with COM– is opened, emergency stop input error (error code No.39) occurs, and the circuit trips. • Tripping can be reset using an alarm clear input initiated by specifying point 0 or assigning the multi-function inputs (EX-IN1, EX-IN2).
Point specifying input	P1IN	3	• Specify an operation point number when operation command is input. • The number at which operation point can be specified depends on the number of points set by SV.Pr57. • SV.Pr58 can be used for setting input logic. When the point described below is specified, special operation is performed. 1)Specify point 0, and input a strobe signal, then alarm is cleared. 2)Specify the maximum point number specified in SV.Pr57, and input a strobe signal, then system returns to the home position. 3)Specify the maximum point number specified in SV.Pr57 –1 and input a strobe signal, then high-speed normal rotation jog is performed. 4)Specify the maximum point number specified in SV.Pr57 –2 and input a strobe signal, then high-speed reverse rotation jog is performed.
	P2IN	4	
	P4IN	5	
	P8IN	6	
	P16IN	7	
	P32IN	8	
CCW over-travel inhibit input	CCWL	19	• CCW drive prohibition input (CCWL). • Connect so as to open COM– connection when movable part of the equipment exceeds the movable range in CCW direction. • When this input is open, operation command in CCW direction is not issued. (Torque is generated) • SV.Pr53, 54, and 55 enable for setting of valid/invalid, input logic, and operation.
CW over-travel inhibit input	CWL	20	• CW drive prohibition input (CWL). • Connect so as to open COM– connection when movable part of the equipment exceeds the movable range in CW direction. • When this input is open, operation command in CW direction is not issued. (Torque is generated) • SV.Pr53, 54, and 55 enable setting of valid/invalid, input logic, and operation.
Home sensor input	Z-LS	21	• Connect so as to close the home sensor input when system is in the vicinity of home position (default). SV.Pr56 can be used for setting input logic. • Connected to the home sensor signal.
Servo-ON signal input	SRV-ON	23	• Connect so as to close the home sensor input when system is in the vicinity of home position. Pr56 can be used for setting input logic. • When servo driver is connected to COM– of control signal power supply, it is set in servo-ON condition. • When connection to COM– is opened, servo-OFF condition is set, and energization of motor is cut off. • Dynamic brake operation and deviation counter clearing operation in servo-OFF condition can be chosen by SV.Pr69 (sequence at servo-off). • SV.Pr5D enable setting of valid/invalid. **<Notes>** 1)When shifting from servo-OFF to servo-ON, make sure that the motor is stopped. 2)After shifting to servo-ON, allow 100ms or more before giving an instruction. 3)Frequent repeating of servo-ON/OFF may damage the dynamic brake circuit contained in servo driver. Avoid such a use.

Application	Code	Connector pin No.	Function
Strobe signal input	STB	24	• When this is connected to COM– of the control signal power supply, the servo driver starts the movement to the specified point. • When 10ms or more has passed after setting specified point input, connect the strobe signal input (STB) to COM–. It is possible that the servo driver is unable to read specified point input properly. • Input STB signal 10ms or longer. Also, reset STB signal to opened condition after receiving BUSY signal from the servo driver in order to ensure that STB signal is received reliably.
Multi-function input 1	EX-IN1	22	Function can be selected and set by Pr5A and 5C out of the options below. Instantaneous stop, temporary stop, deceleration stop, high-speed normal rotation jog, high-speed reverse rotation jog, and alarm clearing Input logic can be set by SV.Pr59 and 5B.
Multi-function input 2	EX-IN2	25	

Overview of Point Spesifying Input

Operation instruction is specified by use of signal for point specifying input (P1IN to P32IN).
See the table below for the relation between point specifying input and operation instruction.
In order to execute an instruction, determine the kind of instruction by P1IN to P32IN, and then input a strobe signal.

<Remarks>
Because down of the signal wires during moving operation or exceptionally larger external noise disturbance may result in unexpected action, the protective equipments like limit sensors or emergency stop input must be installed before using.

Ex) When SV.Pr57 = 3 (6 bits) is set

Point No.	P32IN	P16IN	P8IN	P4IN	P2IN	P1IN	Description
0 (00H)	H	H	H	H	H	H	Alarm clearing instruction
1 (01H)	H	H	H	H	H	L	Moves to step parameter 1.
2 (02H)	H	H	H	H	L	H	Moves to step parameter 2.
3 (03H)	H	H	H	H	L	L	Moves to step parameter 3.
4 (04H)	H	H	H	L	H	H	Moves to step parameter 4.
5 (05H)	H	H	H	L	H	L	Moves to step parameter 5.
6 (06H)	H	H	H	L	L	H	Moves to step parameter 6.
7 (07H)	H	H	H	L	L	L	Moves to step parameter 7.
8 (08H)	H	H	L	H	H	H	Moves to step parameter 8.
9 (09H)	H	H	L	H	H	L	Moves to step parameter 9.
10 (0AH)	H	H	L	H	L	H	Moves to step parameter 10.
~	~	~	~	~	~	~	~
59 (3BH)	L	L	L	H	L	L	Moves to step parameter 59.
60 (3CH)	L	L	L	L	H	H	Moves to step parameter 60.
61 (3DH)	L	L	L	L	H	L	High-speed jog operation (negative)
62 (3EH)	L	L	L	L	L	H	High-speed jog operation (positive)
63 (3FH)	L	L	L	L	L	L	Homing instruction

<Notes>
- H indicates the opened contact condition and L the closed contact condition.
- The number of point inputs can be set by SV.Pr57.
- The logic of point input can be changed by SV.Pr58.
  The table above describes the case where SV.Pr58 is "1: Point input valid by closed connection with COM–".
  In the case of "0: Point input valid by opened connection with COM–", "H" and "L" are reversed.
- Point number of "High-speed jog operation (negative)", "High-speed jog operation (positive)", and "Homing instruction" depends on the setting of SV.Pr57.

Common output signals and their functions

Application	Code	Connector pin No.	Function
Servo alarm ˜ output	˜ ALM	˜ 15	Output signal indicating that the alarm is on.˜ Output transistor turns on in normal condition, and output transistor turns off when alarm is on.
˜ ˜ Positioning ˜ completion ˜ output/˜ Output during deceleration	˜ ˜ ˜ COIN/˜ DCLON ˜	˜ ˜ ˜ ˜ 27 ˜	• This output signal can be used by choosing positioning completion output (COIN) or output during deceleration (DCLON) by SV.Pr64.˜ COIN: When the amount of position deviation pulse is within the range set by SV.Pr60 (In-position range), the transistor turns on. However, while the operation command is being processed, it will not turn ON even inside the positioning completion range.˜ DCLON: Transistor turns ON while the motor is decelerating. However, the signal is not output when the motor has stopped because the deceleration time is zero.
˜ ˜ Motor operation condition output	˜ ˜ BUSY	˜ ˜ 28	• Transistor turns OFF while the servo driver is processing operation command.˜ **<Notes>** When an operation command has been started by the strobe signal input (STB), the motor operation status output remains OFF until the strobe signal input is set to the opened condition.
˜ ˜ ˜ ˜ ˜ ˜ ˜ ˜ ˜ Present position output ˜	P1OUT˜	29˜	• Outputs the present motor position (point number) when the step operation is completed.˜ • All the transistors are OFF (point 0) when the power is turned on. However, when the absolute mode is established or when the 16.Pr38 is set to 1 (homing is invalid), the maximum point number set in the SV.Pr57 (Selecting the number of input points) is output.˜ • Upon completion of homing, the maximum point number set in the SV.Pr57 (Selecting the number of input points) is output.˜ • During high-speed normal rotation jog operations, the maximum point number set in the SV.Pr57 (Selecting the number of input points) minus 1 is output after the motor has stopped.˜ • During high-speed reverse rotation jog operations, the maximum point number set in the SV.Pr57 (Selecting the number of input points) minus 2 is output after the motor has stopped.˜ When an alarm has occurred, all the transistors are set OFF.˜ **<Note>** When an operation has been aborted because of servo OFF, instantaneous stop or deceleration stop, the last status is held as the current position output. To obtain the correct output, move to the reference position (home point, absolute position command point).
	P2OUT˜	30˜	
	P4OUT˜	31˜	
	P8OUT˜	32˜	
	P16OUT˜	33˜	
	P32OUT	34	
˜ Brake release output	˜ ˜ BRK-OFF	˜ ˜ 36	• Defines the timing signal to activate the electromagnetic brake for the motor.˜ When the electromagnetic brake is released, the output transistor turns ON.˜ • Output timing of this signal can be set by SV.Pr6A (Mechanical brake delay at motor standstill) and SV.Pr6B (Mechanical brake delay at motor in motion).

Output signal (pulse train) and function

Application	Code	Connector pin No.	Function
A-phase output ˜ ˜ ˜	OA+˜ ˜	11˜ ˜	• Division-processed encoder signal or external scale signal (A/B-phase) is output in differential mode. (RS422)˜ • SV.Pr44 (numerator of output pulse ratio) and SV.Pr45 (denominator of output pulse ratio) can be used to set the division ratio.˜ • SV.Pr46 (pulse output logic inversion) can be used to select the logic relation of phase B with regard to the pulse of phase A, and its output source.˜ • Ground of line driver of the output circuit is connected to signal ground (GND); not insulated.˜ • The maximum output frequency is 4 Mpps (after being multiplied by 4).˜ ˜
	OA–˜ ˜	12˜ ˜	
˜ B-phase output ˜ ˜ ˜	OB+˜ ˜	13˜ ˜	
	OB–˜ ˜	14˜ ˜	
˜ Z-phase output ˜ ˜ ˜	OZ+˜ ˜	9˜ ˜	
	OZ–˜ ˜	10˜ ˜	
˜ Z-phase output ˜ ˜	˜ CZ	˜ 16	• Open collector output of Z-phase signal.˜ • Emitter side of the transistor of the output circuit is connected to signal ground (GND); not insulated.

<Note>

• When the output source is the encoder

• If the encoder resolution X $\frac{\text{SV.Pr44}}{\text{SV.Pr45}}$ is multiple of 4, Z-phase will be fed out synchronizing with A-phase.
In other case, the Z-phase width will be equal to the encoder resolution, and will not synchronize with A-phase because of narrower width than that of A-phase.

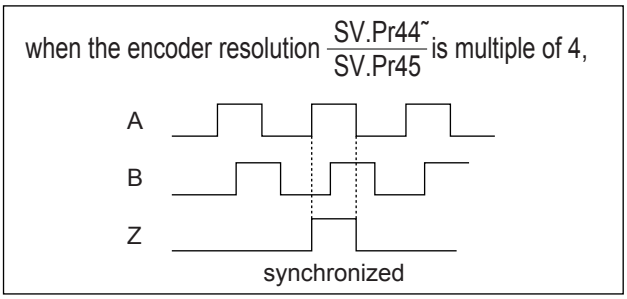

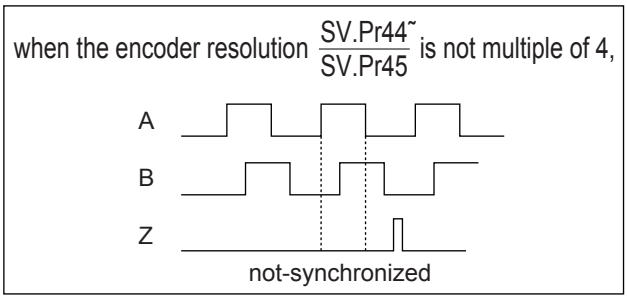

• In case of the 5-wire, 2500P/r incremental encoder, the signal sequence might not follow the above fig. until the first Z-phase is fed out. When you use the pulse output as the control signal, rotate the motor one revolution or more to make sure that the Z-phase is fed out at least once before using.

Others

Application	Code	Connector pin No.	Function
Frame ground	FG	18	• Internally connected to the ground terminal inside the servo driver.
Signal ground	GND	26	• Signal ground • Internally insulated from the control signal power supply (COM–) inside the servo driver.

Setup with the Front Panel

Composition of Touch Panel and Display

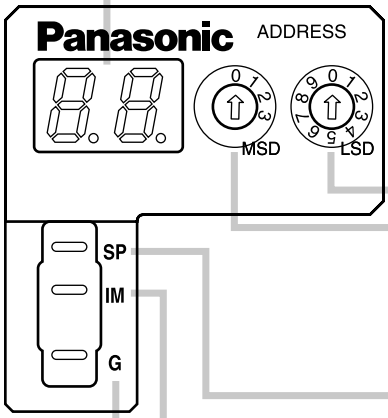

Display LED (2 digits)˜
In the case of an error, the alarm code will flash.˜
In the case of a warning, the warning code (about 2 seconds) will alternate at about 4 seconds intervals with 00.˜

ID address setup rotary switch
LSD : Lower-shifting (Default : 0)˜
MSD : Upper-shifting (Default : 0)˜
For manufacturers' use only. ˜
(Not for individual use)˜

Output signal (Analog signal)
Speed monitor output˜
Torque monitor output˜
Signal ground

Initial Status of the Front Panel Display (7-Segment LED)

When an alarm has been given, an alarm code of two-digit decimal number blinks on the front panel display (7-segment LED) of this servo driver. When no alarm is given, the display shows as follows:

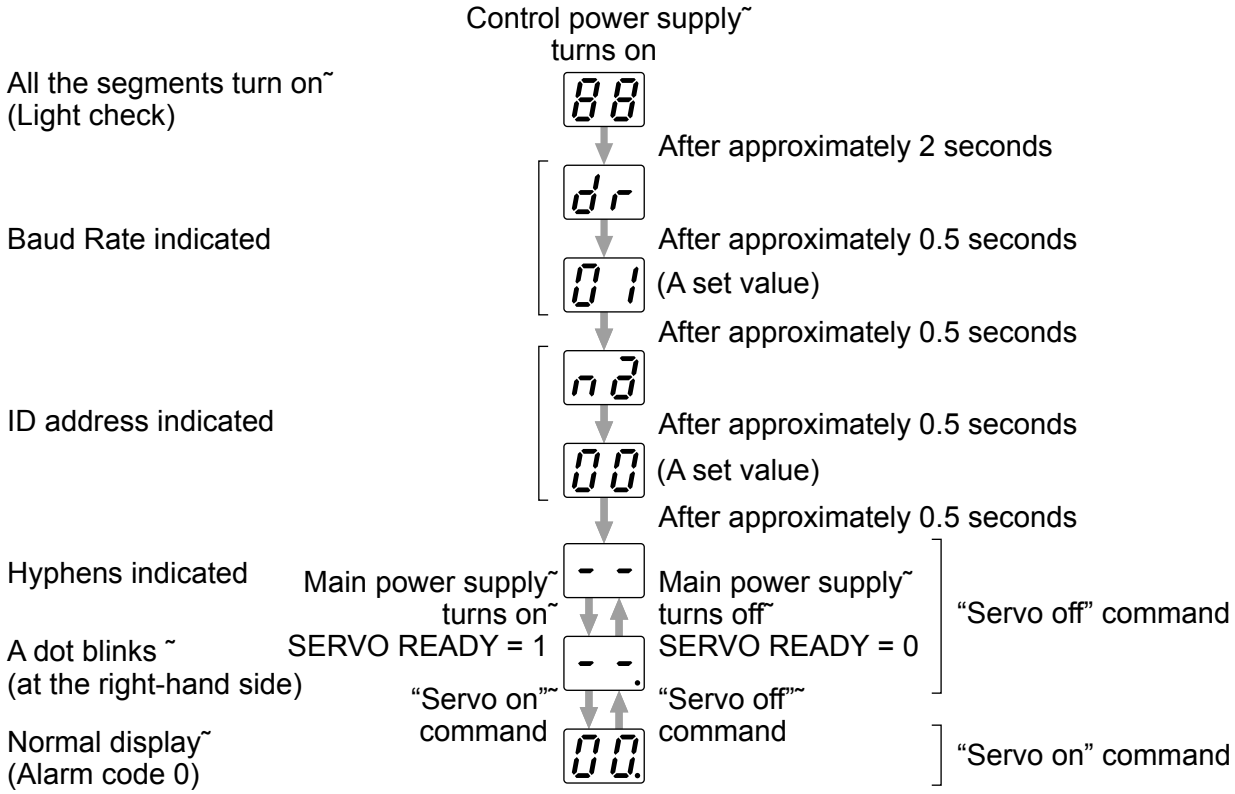

• When an alarm has been given

16 An alarm code blinks.˜
(In the case of overflow)

• When a warning has been given

A warning code and normal state are shown in turn

16. ⇄ 00.

Warning code˜ (Approximately 2 seconds)
Normal display˜ (Approximately 4 seconds)

Output Signals (Analog) and Their Functions

Application	Code	Function
Speed monitor signal output	SP	• The content of the output signal varies depending on SV.Pr07 (Speed monitor (IM) selection). • You can set up the scaling with SV.Pr07 value. <table><tr><th>SV.Pr07</th><th>Control mode</th><th>Function</th></tr><tr><td>0 to 4</td><td>Motor speed</td><td>• Feeds out the voltage in proportion to the motor speed with polarity. + : rotates to CCW – : rotates to CW</td></tr><tr><td>5 to 9</td><td>Command speed</td><td>• Feeds out the voltage in proportion to the command speed with polarity. + : rotates to CCW – : rotates to CW</td></tr></table>
Torque monitor signal output	IM	• The content of output signal varies depending on SV.Pr08 (Torque monitor (IM) selection). • You can set up the scaling with SV.Pr08 value. <table><tr><th>SV.Pr08</th><th>Control mode</th><th>Function</th></tr><tr><td>0, 11,12</td><td>Torque command</td><td>• Feeds out the voltage in proportion to the motor torque command with polarity. + : generates CCW torque – : generates CW torque</td></tr><tr><td>1 – 5</td><td>Positional deviation</td><td>• Feeds out the voltage in proportion to the positional deviation pulse counts with polarity. + : positional command to CCW of motor position – : positional command to CW of motor position</td></tr></table>

Built-in Holding Brake

In the applications where the motor drives the vertical axis, this brake would be used to hold and prevent the work (moving load) from falling by gravity while the power to the servo is shut off.

<Caution>

Use this built-in brake for "Holding" purpose only, that is to hold the stalling status. Never use this for "Brake" purpose to stop the load in motion.

Connecting Example

The following shows the example when the brake is controlled by using the brake release output signal (BRK-OFF) of the driver.

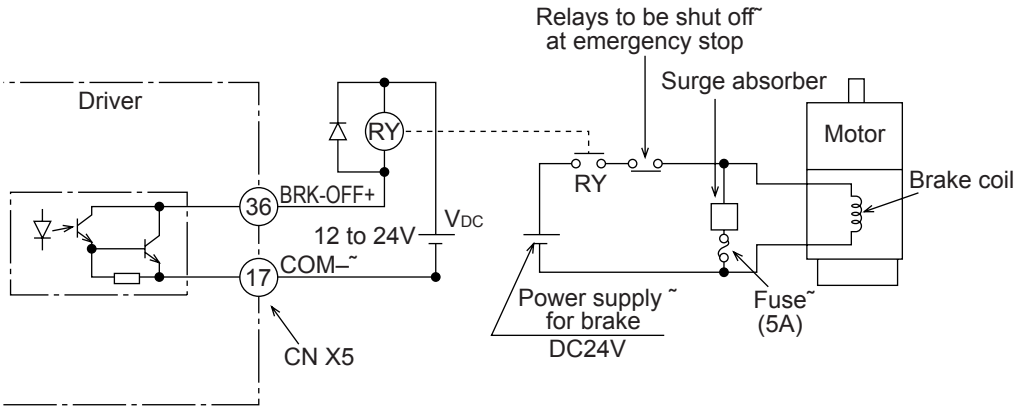

<Notes, Cautions>

1. The brake coil has no polarity.
2. Power supply for the brake to be provided by customer. Do not co-use the power supply for the brake and for the control signals (V_{DC}).
3. Install a surge absorber as the above Fig. shows to suppress surge voltage generated by ON/OFF action of the relay (RY). When you use a diode, note that the time from the brake release to brake engagement is slower than that of the case of using a surge absorber.
4. For a surge absorber, refer to P.191, "Recommended Components"of Supplement.
5. Recommended components are specified to measure the brake releasing time.
   Reactance of the cable varies depending on the cable length, and it might generate surge voltage.
   Select a surge absorber so that relay coil voltage (max. rating : 30V, 50mA) and terminal voltage may not exceed the rating.

Output Timing of BRK-OFF Signal

- For the brake release timing at power-on, or braking timing at Servo-OFF/Servo-Alarm while the motor is in motion, refer to P.133, 135, "Timing Chart".
- With the parameter, SV.Pr6B (Setup of mechanical brake action while the motor is in motion), you can set up a time between when the motor enters to a free-run from energized status and when BRK-OFF signal turns off (brake will be engaged), when the Servo-OFF or alarm occurs while the motor is in motion.

<Notes>

1. The lining sound of the brake (chattering and etc.) might be generated while running the motor with built-in brake, however this does not affect any functionality.
2. Magnetic flux might be generated through the motor shaft while the brake coil is energized (brake is open). Pay an extra attention when magnetic sensors are used nearby the motor.

Specifications of Built-in Holding Brake

Motor series	Motor output	Static friction torque N·m	Rotor inertia $X10^{-4}$ kg·m²	Engaging time ms	Releasing time ms*	Exciting current DC A (at cool-off)	Releasing voltage	Permissible work (J) per one braking	Permissible total work x 10^3J
MSMD MAMA	50W, 100W	0.29 or more	0.002	35 or less	10 or less	0.25	DC2V or more	39.2	4.9
	200W, 400W	1.27 or more	0.018	50 or less		0.30		137	44.1
	750W	2.45 or more	0.075	70 or less	20 or less	0.35		196	147
MQMA	100W	0.29 or more	0.03	50 or less	15 or less	0.29	DC1V or more	137	44.1
	200W, 400W	1.27 or more	0.09	60 or less		0.41		196	147
MSMA	1.0kW	4.9 or more	0.25	50 or less	15 or less (100)	0.74	DC2V or more	392	196
	1.5kW, 2.0kW	7.8 or more	0.33			0.81			490
	3.0kW	11.8 or more		80 or less					
	4.0kW, 5.0kW	16.1 or more	1.35	110 or less	50 or less (130)	0.90		1470	2156
MDMA	1.0kW	4.9 or more	1.35	80 or less	70 or less (200)	0.59		588	780
	1.5kW, 2.0kW	13.7 or more		100 or less	50 or less (130)	0.79		1176	1470
	3.0kW	16.1 or more		110 or less		0.90		1470	2156
	4.0kW	21.5 or more	4.25	90 or less	35 or less (150)	1.10		1078	2450
	5.0kW	24.5 or more	4.7	80 or less	25 or less (200)	1.30		1372	2940
MHMA	500W, 1.0kW	4.9 or more	1.35		70 or less (200)	0.59		588	784
	1.5kW	13.7 or more		100 or less	50 or less (130)	0.79		1176	1470
	2.0kW to 5.0kW	24.5 or more	4.7	80 or less	25 or less (200)	1.30		1372	2940
MFMA	400W	4.9 or more	1.35		70 or less (200)	0.59		588	784
	1.5kW	7.8 or more	4.7		35 or less (150)	0.83		1372	2940
	2.5kW	21.6 or more	8.75	150 or less	100 or less (450)	0.75		1470	1470
	4.5kW	31.4 or more							2156
MGMA	900W	13.7 or more	1.35	100 or less	50 or less (130)	0.79		1176	1470
	2.0kW	24.5 or more	4.7	80 or less	25 or less (200)	1.3		1372	2940
	3.0kW, 4.5kW	58.8 or more		150 or less	50 or less (130)	1.4			

- Excitation voltage is DC24±10%.
- * Values represent the ones with DC-cutoff using a surge absorber for holding brake.
  Values in ( ) represent those measured by using a diode (V03C by Renesas Technology Corp.)
- Above values (except static friction torque, releasing voltage and excitation current) represent typical values.
- Backlash of the built-in holding brake is kept ±1° or smaller at ex-factory point.
- Permissible angular acceleration : 30000rad/s² for MAMA series
  10000rad/s² for MSMD, MQMA, MSMA, MDMA, MHMA, MFMA and MGMA series
- Service life of the number of acceleration/deceleration with the above permissible angular acceleration is more than 10 million times.
  (Life end is defined as when the brake backlash drastically changes.)

Dynamic Brake

This driver is equipped with a dynamic brake for emergency stop.
Pay a special attention to the followings.

<Caution>

1. Dynamic brake is only for emergency stop.

Do not start/stop the motor by turning on/off the Servo-ON signal (SRV-ON).
Or it may damage the dynamic brake circuit of the driver.

The motor becomes a dynamo when driven externally, and shorting current runs while this dynamic brake is activated and might cause smoking or fire.

2. Dynamic brake is a short-duration rating, and designed for only emergency stop. Allow approx. 3 minutes pause when the dynamic brake is activated during high-speed running.
   (Over-current protection (error code No. 14) may be activated when the dynamic brake circuit inside the F-frame driver has overheated.)

• You can activate the dynamic brake in the following cases.
  1) When the main power is turned off
  2) At Servo-OFF
  3) When one of the protective function is activated.

  In the above cases from 1) to 3), you can select either activation of the dynamic brake or making the motor free-run during deceleration or after the stop, with parameter.
  Note that when the control power is off, the dynamic brake will be kept activated.

1) Setup of driving condition from deceleration to after stop by main power-off (SV.Pr67)

Sequence at main power-off (SV.Pr67)	Driving condition: during deceleration	Driving condition: after stalling	Contents of deviation counter
Setup value of SV.Pr67 ↓ 0	D B	D B	Clear
1	Free-run	D B	Clear
2	D B	Free-run	Clear
3	Free-run	Free-run	Clear
4	D B	D B	Hold
5	Free-run	D B	Hold
6	D B	Free-run	Hold
7	Free-run	Free-run	Hold
8	Emergency stop	D B	Clear
9	Emergency stop	Free-run	Clear

Torque limit value at emergency stop will be that of SV.Pr6E (Emergency stop torque set up) when the setup value is 8 or 9.

2) Setup of driving condition from deceleration to after stop by Servo-OFF (SV.Pr69)

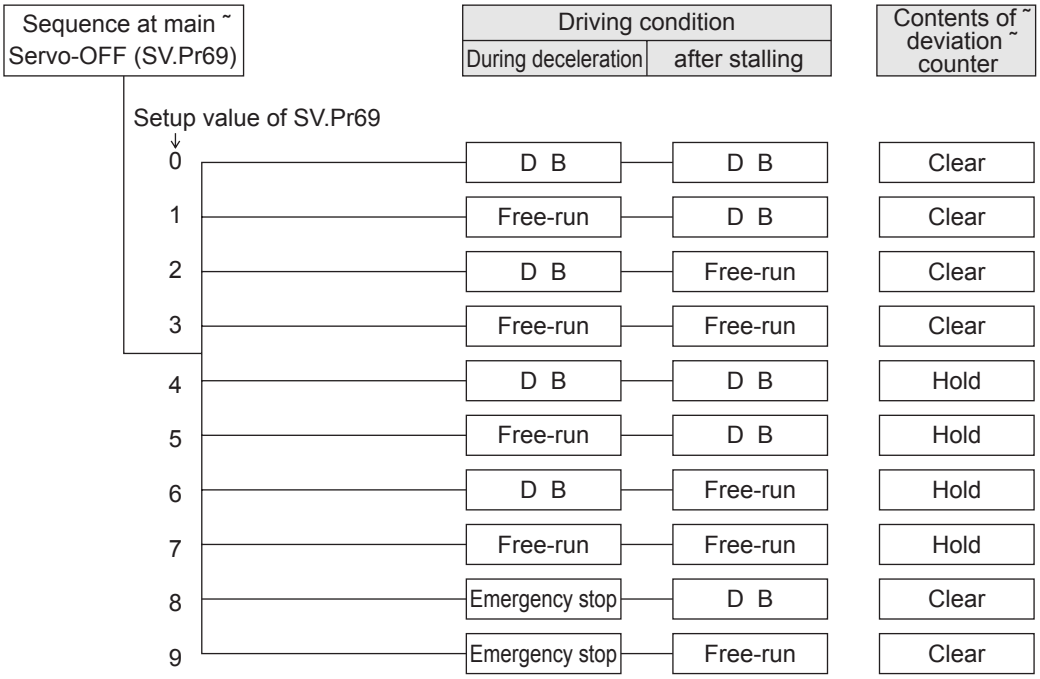

Torque limit value at emergency stop will be that of SV.Pr6E (Emergency stop torque set up) when the setup value is 8 or 9.

3) Setup of driving condition from deceleration to after stop by activation of protective function (SV.Pr68)

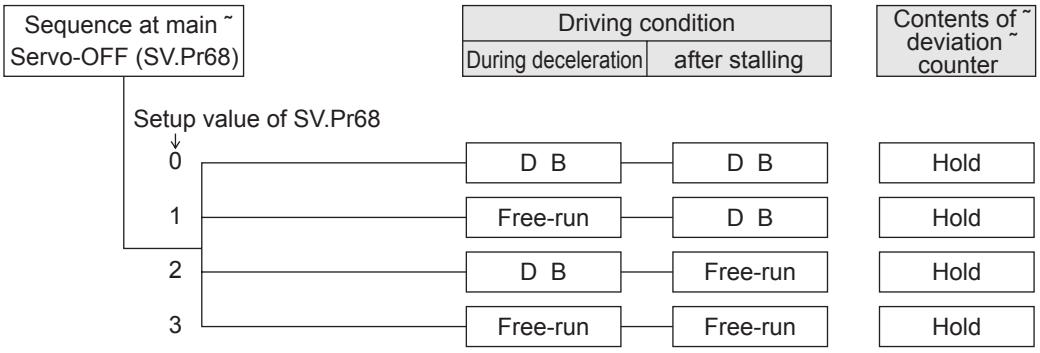

Deviation counter at activation of protective function will be cleared at alarm-clear.

MEMO

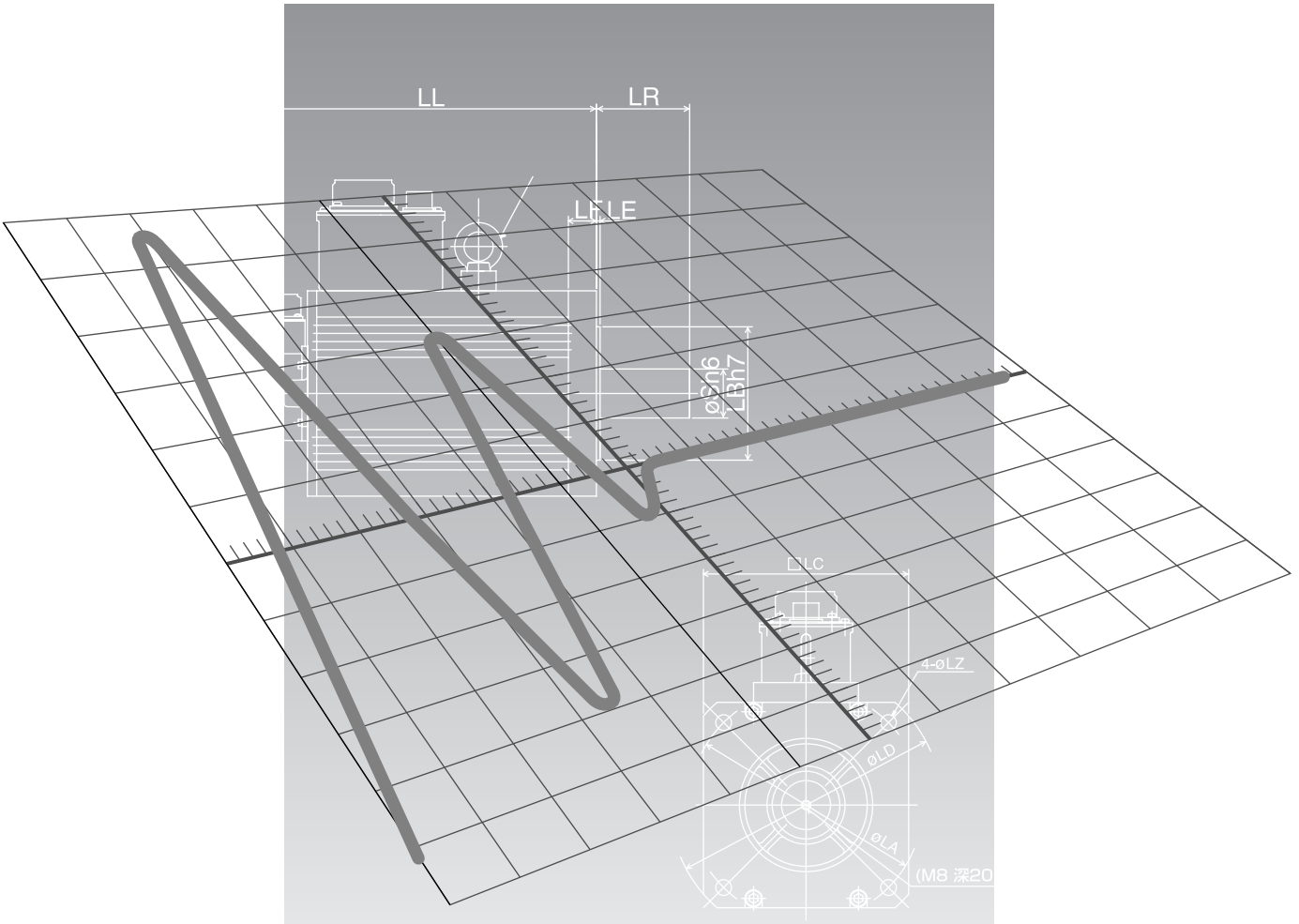

[Setting]

page

Parameter Setup 56

Outline of Parameter 56
How to Set 56
Outline of PANATERM® 56
How to Connect 56
Composition of Parameters 57
List of Servo Parameter 58
List of 16-bit Positioning Parameters 73
List of 32-bit Positioning Parameters 77
List of Step Parameters 77
Setup of Torque Limit 78

How to Use the Console 80

Setup with the Console 80
Initial Status of the Console Display (7 Segment LED) 80
Mode Change 81
Monitor Mode 82
Teaching Mode 87
Parameter setup mode 91
EEPROM Writing Mode 96
Auto-Gain Tuning Mode 97
Auxiliary Function Mode 98
Copying Function (Console Only) 101

Outline of Setup Support Software, "PANATERM®" 103

Outline of PANATERM® 103
How to Connect 103

Parameter Setup

Outline of Parameter

This driver is equipped with various parameters to set up its characteristics and functions. This section describes the outline of each parameter. Read and comprehend very well so that you can adjust this driver in optimum condition for your running requirements.

<Remarks>
The parameter numbers not be mentioned in this section are not for individual use but for manufacturers' use. Do not change these parameters from the default setting.

How to Set

• You can refer and set up the parameter with either one of the following.
1) Console (DV0P4420, option)
2) Combination of the setup support software, "PANATERM®" (Option, DV0P4460: Japanese / English version) and PC.

<Note>
For setup of the parameters on PC screen, refer to the instruction manual of the "PANATERM®".

Outline of PANATERM®

With the PANATERM®, you can execute the followings.
1) Setup and storage of parameters, and writing to the memory (EEPROM).
2) Monitoring of I/O and pulse input and load factor.
3) Display of the present alarm and reference of the error history.
4) Data measurement of the wave-form graphic and bringing of the stored data.
5) Normal auto-gain tuning
6) Frequency characteristic measurement of the machine system.

How to Connect

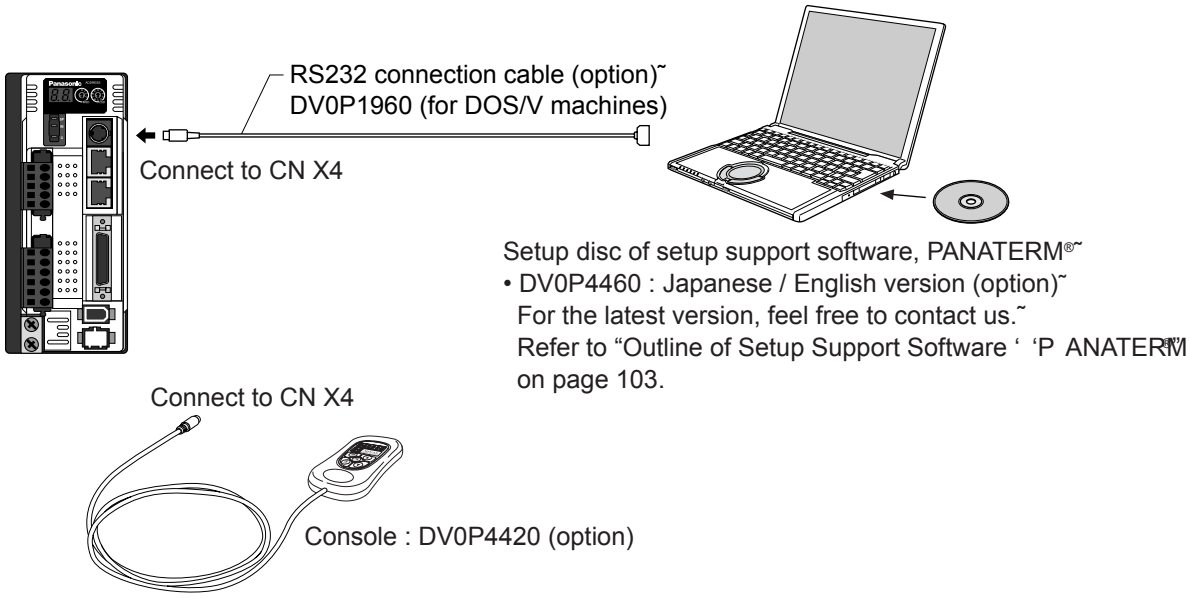

<Remarks>
• Connect the console connector to the connector, CN X4 of the driver securely.
• Do not pull the cable to insert/unplug.

Composition of Parameters

• Servo parameter

Group		Servo parameter No.	Outline
Servo parameter	Function selection˜ ˜ ˜	01 to 03,˜ 07,08,0B,˜ 0C,0F˜	You can select a control mode, ˜ and set up a baud rate.˜ ˜
	Adjustment˜ ˜ ˜ ˜ ˜ ˜	10 to 1E, ˜ 27 to 2E˜	You can set up servo gains (1st and 2nd) of position, velocity, integration, etc, and time constants of various filters.˜
		20 to 26, 2F ˜	Parameters related to Real Time Auto-Gain Tuning. You˜ can set up a mode and select a mechanical stiffness.˜
		30 to 35˜ ˜	You can set up parameters related to gain˜ switching(1st ⟷ 2nd)˜
	Position Control˜ ˜	44 to 46,˜ 4C, 4D˜	You can set up dividing of encoder output pulse.˜ ˜
	Input signals˜ ˜	53 to 5D˜	You can set up the logic of input signals and the number of point input.˜
		5E to 5F˜	You can set up a torque limit of torque command.˜
	Sequence˜ ˜ ˜ ˜ ˜ ˜	60, 64, 65,˜ 67 to 6E˜ ˜ ˜ ˜	You can set up detecting conditions of output signals, such as positioning-completion.˜ You can also set up a deceleration/stop action at˜ main power-off, at alarm output and at servo-off,˜ and clear condition of the deviation counter.˜
		70, 72, 73˜	You can set up actions of protective functions.˜
	Full-Closed Control˜	78 to 7C˜	You can set up dividing of external scale.

• 16-bit positioning parameter

Group		16-bit positioning parameter No.	Outline
16-bit positioning parameter	Motor speed˜ Acceleration and	00 to 0F˜ ˜	You can set speed data of step operation.˜ ˜
	Deceleration˜	10 to 1F˜	You can set acceleration and deceleration data of step operation.˜
	Homing˜	30 to 3B˜	You can set data for homing.˜
	Jog operation˜	40 to 45˜	You can set data for jog operation.˜
	Others	48 to 54	You can set data for teaching or operation direction and so on.˜

• 32-bit positioning parameter

Group	32-bit positioning parameter No.	Outline
32-bit positioning parameter	00 to 03	You can set data for offset or maximum movement.

• Step parameter

Group		Outline
Step parameter	Operation mode˜ ˜ ˜	Specifying the positioning procedure.˜ ABS (absolute position), INC (relative position),˜ Rotary (rotation coordinates), and Dwell time (standby time)˜
	Position/waiting time˜ ˜	Inputting the coordinate data for positioning.˜ When dwell time is selected in operation mode, set the standby time.˜
	Speed˜ ˜	Selecting a speed selection number in positioning.˜ Setting the speed by 16-bit positioning parameter.˜
	Acceleration˜ ˜	Selecting an acceleration speed selecting number in positioning.˜ Setting the speed by 16-bit positioning parameter.˜
	Deceleration˜ ˜	Selecting a deceleration speed selecting number in positioning.˜ Setting the speed by 16-bit positioning parameter.˜
	Block	Choosing either single operation or block operation.

• In this document, following symbols represent each mode.

Symbol	Control mode	Setup value of servo parameter No.02
P˜	Position control˜	0˜
F	Full-Closed control	6

Parameter Setup

List of Servo Parameter

Parameters for Functional Selection

Standard default : < >

Servo PrNo.	Title	Setup range	Function/Content
01˜ *	7-segment LED status for console, initial condition display	0 to 15˜ <1>	You can select the type of data to be displayed on the console LED (7 segment) at the initial status after power-on.

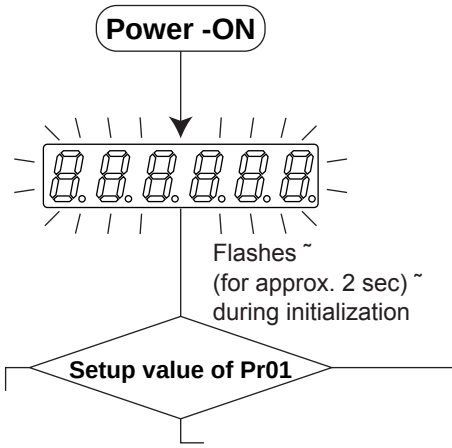

For details of display, refer to the ˜ technical reference or instruction ˜ manual of the console.

Setup value	Content
0˜	Positional deviation˜
<1>˜	Motor rotational speed˜
2˜	Torque output˜
3˜	Control mode˜
4˜	I/O signal status˜
5˜	Error factor/history˜
6˜	Software version˜
7˜	Alarm˜
8˜	Regenerative load factor˜
9˜	Over-load factor˜
10˜	Inertia ratio˜
11˜	Sum of feedback pulses˜
12˜	Sum of command pulses˜
13˜	External scale deviation˜
14˜	Sum of external scale feedback pulses ˜
15	Motor automatic recognizing function

Servo PrNo.	Title	Setup range	Function/Content
02˜ *	Control mode	0, 6˜ <0>	You can set up the control mode to be used.

Setup value of˜ SV.Pr.02˜	Control mode	Symbol
<0>˜	Position˜	P˜
6	Full-closed	F

Servo PrNo.	Title	Setup range	Function/Content
03	Torque limit selection	0 to 3˜ <1>	You can set up the torque limiting method for CCW/CW direction.

Setup value	CCW	˜ CW
0, <1>˜	Pr5E is ã limit value for both CCW and CW đirection	
2, 3	Set with SV.Pr5E	Set with SV.Pr5F

Servo PrNo.	Title	Setup range	Function/Content
07	Speed monitor (SP) selection	0 to 9˜ <3>	You can set up the content of analog speed monitor signal output (SP : CN X5, Pin43) and the relation between the output voltage level and the speed.

Setup value	Signal of SP	Relation between the output voltage level and the speed
0˜	˜ Motor actual˜ speed˜ ˜ ˜	6V / 47 r/min˜
1˜		6V / 188 r/min˜
2˜		6V / 750 r/min˜
<3>˜		6V / 3000 r/min˜
4˜		1.5V / 3000 r/min˜
5˜	˜ Command˜ speed	6V / 47 r/min˜
6˜		6V / 188 r/min˜
7˜		6V / 750 r/min˜
8˜		6V / 3000 r/min˜
9		1.5V / 3000 r/min

<Notes>

- For servo parameters which No. have a suffix of "*", changed contents will be validated when you turn on the control power.
- Parameters which default values have a suffix of "*" will be automatically set up during real time auto-gain tuning. When you change manually, invalidate the real-time auto-gain tuning first then set, referring to P.151, "Release of Automatic Gain Adjusting Function" of Adjustment.

Standard default : < >

Servo PrNo.	Title	Setup range	Function/Content
08	Torque monitor (IM) selection	0 to 12˜ <0>	You can set up the content of the analog torque monitor of the signal output (IM : CN X5, Pin-42), and the relation between the output voltage level and torque or deviation pulse counts.

Setup value	Signal of IM	Relation between the output voltage level and torque or deviation pulse counts
<0>˜	Torque command˜	3V/rated (100%) torque˜
1˜	˜ Position˜ deviation˜ ˜ ˜	3V / 31Pulse˜
2˜		3V / 125Pulse˜
3˜		3V / 500Pulse˜
4˜		3V / 2000Pulse˜
5˜		3V / 8000Pulse˜
6˜	˜ Full-closed˜ deviation˜ ˜	3V / 31Pulse˜
7˜		3V / 125Pulse˜
8˜		3V / 500Pulse˜
9˜		3V / 2000Pulse˜
10˜		3V / 8000Pulse˜
11˜	Torque˜ command	3V / 200% torque ˜
12		3V / 400% torque

Servo PrNo.	Title	Setup range	Function/Content
0B˜ *	Absolute encoder set up	0 to 2˜ <1>	You can set up the using method of 17-bit absolute encoder.

Setup value	Content
0˜	Use as an absolute encoder.˜
<1>˜	Use as an incremental encoder.˜
2	Use as an absolute encoder, but ignore the multi-turn counter over.

<Caution>˜
This parameter will be invalidated when 5-wire, 2500P/r incremental encoder is used.

Servo PrNo.	Title	Setup range	Function/Content
0C˜ *	Baud rate of RS232	0 to 5˜ <2>	You can set up the communication speed of RS232. • Error of baud rate is ±0.5%.

Setup value	Baud rate	Setup value	Baud rate
0˜	2400bps˜	3˜	19200bps˜
1˜	4800bps˜	4˜	38400bps˜
<2>	9600bps	5	57600bps

<Caution>˜
If the console is used specify the set value 2 (9600 bps).

Servo PrNo.	Title	Setup range	Function/Content
0F	Node address	–˜ (display only)	Shows the axis number set by a rotary switch at the front panel of the driver. The axis number cannot be changed.

Parameters for Adjustment of Time Constants of Gains and Filters

Standard default : < >

Servo PrNo.	Title	Setup range	Unit	Function/Content
10	1st position loop gain	0 to 3000˜ A to C-frame:<63>* D to F-frame:<32>*	1/s	You can determine the response of the positional control system.˜ Higher the gain of position loop you set, faster the positioning time you can obtain. Note that too high setup may cause oscillation.
11	1st velocity loop gain	1 to 3500˜ A to C-frame:<35>* D to F-frame:<18>*	Hz	You can determine the response of the velocity loop.˜ In order to increase the response of overall servo system by setting high position loop gain, you need higher setup of this velocity loop gain as well. However, too high setup may cause oscillation.˜ **<Caution>** When the inertia ratio of SV.Pr20 is set correctly, the setup unit of SV.Pr11 becomes (Hz).
12	1st velocity loop integration time constant	1 to 1000˜ A to C-frame:<16>* D to F-frame:<31>*	ms	You can set up the integration time constant of velocity loop.˜ Smaller the setup, faster you can dog-in deviation at stall to 0.˜ The integration will be maintained by setting to "999".˜ The integration effect will be lost by setting to "1000".

Standard default : < >

Servo PrNo.	Title	Setup range	Unit	Function/Content
13	1st speed detection filter	0 to 5˜ <0>*	–˜	You can set up the time constant of the low pass filter (LPF) after the speed detection, in 6 steps. Higher the setup, larger the time constant you can obtain so that you can decrease the motor noise, however, response becomes slow. Use with a default value of 0 in normal operation.˜ This setting is invalid if SV.Pr27 (Velocity observer) is enabled.
14	1st torque filter time constant	0 – 2500˜ A to C-frame:<65>*˜ D to F-frame:<126>*	0.01ms	You can set up the time constant of the 1st delay filter inserted in the torque command portion. You might expect suppression of oscillation caused by distortion resonance.
15	Velocity feed forward	–2000˜ to 2000˜ <300>*	0.1%	You can set up the velocity feed forward volume at position control.˜ Use when high-speed response is required.
16	Feed forward filter time constant	0 to 6400˜ <50>*	0.01ms	You can set up the time constant of 1st delay filter inserted in velocity feed forward portion.
18˜ ˜ ˜	2nd position loop gain˜ ˜	0 to 3000˜ A to C-frame:<73>*˜ D to F-frame:<38>*˜	1/s˜ ˜ ˜	Set when performing optimum tuning using the gain switching function.˜ Set the second loop gain for position control.˜ ˜
19˜ ˜ ˜	2nd velocity loop gain˜ ˜	1 to 3500˜ A to C-frame:<35>*˜ D to F-frame:<18>*˜	Hz˜ ˜ ˜	Set when performing optimum tuning using the gain switching function.˜ When SV.Pr20 (Inertia ratio) has been set correctly, the set time is “Hz”.˜ ˜
1A˜ ˜ ˜	2nd velocity loop integration time constant˜	1 to 1000˜ <1000>*˜ ˜	ms˜ ˜ ˜	Set when performing optimum tuning using the gain switching function.˜ When using in a vertical axis, to keep the integration value, set “999”.˜ To disable the integration, set “1000”.˜
1B˜ ˜ ˜ ˜	2nd speed detection filter˜ ˜ ˜	0 to 5˜ <0>*˜ ˜ ˜	–˜ ˜ ˜ ˜	Set when performing optimum tuning using the gain switching function.˜ If you increase the value, the motor noise reduces.˜ This setting is disabled if the instantaneous speed observer is enabled (SV.Pr27 = 1).˜
1C	2nd torque filter time constant	0 to 2500˜ A to C-frame:<65>*˜ D to F-frame:<126>*	0.01ms	Set when performing optimum tuning using the gain switching function.˜ Set the time constant of 1st delay filter of the torque command.
1D	1st notch frequency	100 to 1500˜ <1500>	Hz	Specify the frequency of the 1st resonance suppressing notch filter. Use it according to the machine resonance frequency.˜ If this parameter is set to “1500”, the notch filter function is disabled.˜ **<Note>** This parameter may be changed depending on the adaptive filter settings.
1E	1st notch width selection	0 to 4˜ <2>	–˜	You can set up the notch filter width of the 1st resonance suppressing filter in 5 steps.˜ Higher the setup, larger the notch width you can obtain.˜ **<Note>** This parameter may be changed depending on the adaptive filter operation. If it is combined with the adaptive filter, use the 2nd notch filter.
27˜ (P)	Velocity observer	0 to 1˜ <0>*	–˜	With a high stiffness machine, you can achieve both high response and reduction of vibration at stall, by using this instantaneous speed observer. **Setup value** / **Instantaneous speed observer setup** <0>*˜ / Invalid ˜ 1 / Valid You need to set up the inertia ratio of SV.Pr20 correctly to use this function.˜ If you set up SV.Pr21, real-time auto-gain tuning mode setup, to other than 0 (valid), SV.Pr27 becomes 0 (invalid).
28	2nd notch frequency	100 to 1500˜ <1500>	Hz	You can set up the 2nd notch width of the resonance suppressing filter in 5 steps. The notch filter function is invalidated by setting up this parameter to "1500".

Standard default : < >

Servo PrNo.	Title	Setup range	Unit	Function/Content
29	2nd notch width selection	0 to 4˜ <2>	–˜	You can set up the notch width of 2nd resonance suppressing filter in 5 steps. Higher the setup, larger the notch width you can obtain. Use with default setup in normal operation.
2A	2nd notch depth selection	0 to 99˜ <0>	–˜	You can set up the 2nd notch depth of the resonance suppressing filter. Higher the setup, shallower the notch depth and smaller the phase delay you can obtain.
2B	1st vibration suppression frequency	0 to 2000˜ <0>	0.1Hz	You can set up the 1st vibration suppression frequency of the damping control which suppress vibration at the load edge. ˜ The driver measures vibration at load edge. Setup unit is 0.1[Hz]. ˜ The setup frequency is 10.0 to 200.0[Hz]. Setup of 0 to 99 becomes invalid. Refer to P.161, "Damping control" as well before using this parameter.
2C	1st vibration suppression filter	–200 to 2000˜ <0>	0.1Hz	While you set up SV.Pr2B (1st vibration suppression frequency), set this up to smaller value when torque saturation occurs, and to larger value when you need faster action.Use with the setup of 0 in normal operation. Refer to P.161, "Damping control" of Adjustment .˜ **<Caution>** ˜ Setup is also limited by 10.0[Hz] – SV.Pr2B ≦ SV.Pr2C≦ SV.Pr2B
2D	2nd vibration suppression frequency	0 to 2000˜ <0>	0.1Hz	You can set up the 2nd vibration suppression frequency of the damping control which suppress vibration at the load edge.˜ The driver measures vibration at the load edge. Setup unit is 0.1 [Hz].˜ Setup frequency is 10.0 to 200.0 [Hz]. Setup of 0-99 becomes invalid.˜ Refer to P.161, "Damping control" of Adjustment as well before using this parameter.
2E	2nd vibration suppression filter	–200 to 2000˜ <0>	0.1Hz	While you set up SV.Pr2D (2nd vibration suppression frequency), set this up to smaller value when torque saturation occurs, and to larger value when you need faster action.˜ Use with the setup of 0 in normal operation. Refer to P.161, "Damping control" of Adjustment .˜ **<Caution>**˜ Setup is also limited by 10.0[Hz] – SV.Pr2D ≦ SV.Pr2E ≦ SV.Pr2D

Parameters for Auto-Gain Tuning

Standard default : < >

Servo PrNo.	Title	Setup range	Unit	Function/Content
20	Inertia ratio	0 to 10000˜ <250>*	%	You can set up the ratio of the load inertia against the rotor (of the motor) inertia.˜ ˜ ˜ SV.Pr20 = (load inertia/rotor inertia) X 100 [%] When you execute the normal auto-gain tuning, the load inertial will be automatically estimated after the preset action, and this result will be reflected in this parameter.˜ The inertia ratio will be estimated at all time while the real-time auto-gain tuning is valid, and its result will be saved to EEPROM every 30 min.˜ **<Caution>**˜ If the inertia ratio is correctly set, the setup unit of SV.Pr11 and SV.Pr19 becomes (Hz). When the inertia ratio of SV.Pr20 is larger than the actual, the setup unit of the velocity loop gain becomes larger, and when the inertia ratio of SV.Pr20 is smaller than the actual, the setup unit of the velocity loop gain becomes smaller.

<Notes>

- Anything marked with “(P)” on the servo parameter number (Servo PrNo.) can be used only for the “position control”.
- Parameters which default values have a suffix of "*" will be automatically set up during real time auto-gain tuning. When you change manually, invalidate the real-time auto-gain tuning first then set, referring to P.151, "Release of Automatic Gain Adjusting Function" of Adjustment.

Standard default : < >

Servo PrNo.	Title	Setup range	Unit	Function/Content
21	Real time auto tuning set up	0 to 7˜ <1>	–˜	You can set up the action mode of the real-time auto-gain tuning.˜ With higher setup such as 3 or 6, the driver respond quickly to the change of the inertia during operation, however it might cause an unstable operation. Use 1 or 4 for normal operation.For the vertical axis application, use with the setup of 4 to 6.˜ When vibration occurs at gain switching, set up this to "7". **Setup value / Real-time auto-gain tuning / Varying degree of load inertia in motion** 0˜ / Invalid˜ / –˜ <1>˜ / ˜ Normal mode˜ ˜ / Little change˜ 2˜ / Gradual change˜ 3˜ / Rapid change˜ 4˜ / ˜ Vertical axis mode˜ ˜ / Little change˜ 5˜ / Gradual change˜ 6˜ / Rapid change˜ 7 / No gain switching / Little change
22	Machine stiffness at auto tuning	0 to 15˜ A to C-frame:˜ <4>˜ D to F-frame:˜ <1>	–˜	You can set up the machine stiffness in 16 steps while the real-time auto-gain tuning is valid.˜ low←machine stiffness→high˜ low← servo gain →high˜ ˜SV.Pr22 | 0, 1- - - - - - ˜ - - - - - 14, 15 low← response →high **<Caution>˜** When you change the setup value rapidly, the gain changes rapidly as well, and this may give impact to the machine. Increase the setup gradually watching the movement of the machine.
23	Adaptive filter mode	0 to 2˜ <1>	–˜	You can set up the action of the adaptive filter. **Setup value / Content** 0˜ / Invalid˜ <1>˜ / Valid˜ 2 / Hold (holds the adaptive filter frequency when this setup is changed to 2.)
24	Vibration suppression filter switching selection	0 to 2˜ <0>	–˜	You can select the switching method when you use the vibration suppression filter. **Setup value / Content** <0>, 1˜ / No switching (both of 1st and 2nd are valid.)˜ ˜ 2 / You can switch with the position command direction.˜ CCW : 1st damping filter selection (SV.Pr2B, 2C).˜ CW : 2nd damping filter selection (SV.Pr2D, 2E).
25	Normal auto tuning motion setup	0 to 7˜ <0>	–˜	You can set up the action pattern at the normal mode auto-gain tuning. ˜ **Setup value / Number of revolution / Rotational direction** <0>˜ / ˜ 2 [revolution]˜ ˜ ˜ / CCW → CW˜ 1˜ / CW → CCW˜ 2˜ / CCW → CCW˜ 3˜ / CW → CW˜ 4˜ / ˜ 1 [revolution] / CCW → CW˜ 5˜ / CW → CCW˜ 6˜ / CCW → CCW˜ 7 / CW → CW e.g.) When the setup is 0, the motor turns 2 revolutions to CCW and 2 revolutions to CW.

Standard default : < >

Servo PrNo.	Title	Setup range	Unit	Function/Content
26	Software limit set up	0 to 1000˜ <10>	0.1˜ revolution	You can set up the movable range of the motor against the position command input range. When the motor movement exceeds the setup value, software limit protection of Err.34 will be triggered. This parameter is invalid with setup value of 0.
2F	Adaptive filter frequency	0 to 64˜ <0>	–˜	Displays the table No. corresponding to the adaptive filter frequency. (Refer to P.147 of Adjustment.) This parameter will be automatically set and cannot be changed while the adaptive filter is valid. (when SV.Pr23 (Adaptive filter mode) is other than 0.)˜ ˜ Setup value / Filter mode <0> to 4˜ / Filter is invalid.˜ 5 to 48˜ / Filter is valid.˜ 49 to 64 / Filter validity changes according to SV.Pr22. This parameter will be saved to EEPROM every 30 minutes while the adaptive filter is valid, and when the adaptive filter is valid at the next power-on, the adaptive action starts taking the saved data in EEPROM as an initial value.˜ **<Caution>** ˜ When you need to clear this parameter to reset the adaptive action while the action is not normal, invalidate the adaptive filter (SV.Pr23, "Adaptive filter mode" to 0) once, then validate again.˜ Refer to P.151, "Release of Automatic Gain Adjusting Function" of Adjustment as well.

Parameters for Adjustment (2nd Gain Switching Function)

Standard default : < >

Servo PrNo.	Title	Setup range	Unit	Function/Content
30	2nd gain action set up	0 to 1˜ <1>*	–˜	Set when performing optimum tuning using the gain switching function. Setup value˜ / Gain selection/switching 0˜ / 1st gain (SV.Pr10 to 14)˜ <1>* / 1st (SV.Pr10 to 14) / 2nd gain (SV.Pr18 to 1C)
31	1st control switching mode	0 to 10˜ <10>*	–˜	Set a trigger to switch a gain. Setup value˜ / Gain switching condition 0˜ / Fixed to the 1st gain.˜ 1˜ / Fixed to the 2nd gain.˜ 2˜ / Unavailable˜ 3˜ / Toque command variation˜ 4˜ *1˜ / Speed command variation˜ 5˜ *1˜ / Speed command˜ 6˜ *1˜ / Positional deviation˜ 7˜ *1˜ / Positional command˜ 8˜ *1˜ / Positioning is not completed˜ 9˜ *1˜ / Speed˜ ˜ <10>* *1˜ / Position command + speed *1 For the switching level and the timing, refer to P.155, "Gain Switching Function" of Adjustment.
32	1st control switching delay time	0 to 10000˜ <30>*	x 166µs	Set a time from the detection of trigger to actual gain switching when the 2nd gain is switched into the 1st gain, if SV.Pr31 (1st control switching mode) is between 3 and 10.
33	1st control switching level	0 to 20000˜ <50>*	–˜	You can set up the switching (judging) level of the 1st and the 2nd gains, while SV.Pr31 is set to 3, 5, 6. 9 and 10.˜ Unit varies depending on the setup of SV.Pr31 (1st control switching mode)

<Notes>

- Parameters which default values have a suffix of "*" will be automatically set up during real time auto-gain tuning. When you change manually, invalidate the real-time auto-gain tuning first then set, referring to P.151, "Release of Automatic Gain Adjusting Function" of Adjustment.

Standard default : < >

Servo PrNo.	Title	Setup range	Unit	Function/Content
34	1st control switching hysteresis	0 to 20000˜ <33>*	–˜	You can set up hysteresis width to be implemented above/below the judging level which is set up with SV.Pr33. Unit varies depending on the setup of SV.Pr31 (1st control switching mode). Definitions of SV.Pr32 (Delay), SV.Pr33 (Level) and SV.Pr34 (Hysteresis) are explained in the fig. below. 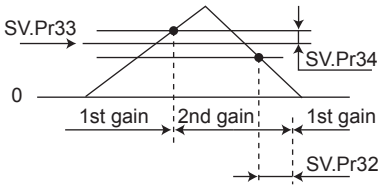 **<Caution>** The setup of SV.Pr33 (Level) and SV.Pr34 (Hysteresis) are valid as absolute values (positive/negative).
35	Position loop gain switching time	0 – 10000˜ <20>*	(setup value +1)˜ x 166µs	You can setup the step-by-step switching time to the position loop gain only at gain switching while the 1st and the 2nd gain switching is valid.˜ **<Caution>** The switching time is only valid when switching from small position gain to large position gain. 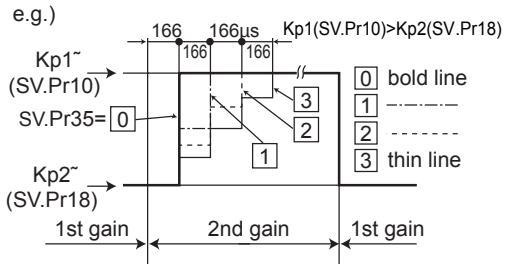

Parameters for Position Control

Standard default : < >

Servo PrNo.	Title	Setup range	Function/Content
44˜ *˜ ˜	Numerator of output pulse ratio˜ ˜	1 to 32767˜ <10000>˜ ˜	You can set up the pulse counts to be fed out from the pulse output (X5 0A+ : Pin-21, 0A- : Pin-22, 0B+ : Pin-48, 0B- : Pin-49).˜ • **In the case that the encoder pulse is output (When the control mode is the position control mode and SV.Pr46 = 0, 1).** • SV.Pr45=0 : ˜ ˜˜˜You can set up the output pulse counts per one motor revolution for each OA and OB with the SV.Pr44 setup. Therefore the pulse output resolution after quadruple can be obtained from the formula below.˜ ˜ The pulse output resolution per one revolution = ˜ ˜ SV.Pr44 (Numerator of output pulse ratio) X 4 • SV.Pr45≠0 :˜ The pulse output resolution per one revolution can be divided by any ration according to the formula below.˜ ˜ ˜ Pulse output resolution per one revolution $\frac{\text{SV.Pr44 (Numerator of output pulse ratio)}}{\text{SV.Pr45 (Denominator of output pulse ratio)}}$ x Encoder resolution **<Cautions>** • The encoder resolution is 131072 [P/r] for the 17-bit absolute encoder, and 10000 [P/r] for the 5-wire 2500P/r incremental encoder.˜ • The pulse output resolution per one revolution cannot be greater than the encoder resolution.˜ (In the above setup, the pulse output resolution equals to the encoder resolution.)˜ • Z-phase is fed out once per one revolution of the motor.˜ When the pulse output resolution obtained from the above formula is multiple of 4, Z-phase synchronizes with A-phase. In other case, the Z-phase width equals to output with the encoder resolution, and becomes narrower than A-phase, hence does not synchronize with A-phase.˜ ˜ (Continue to the next page.)
45˜ *	Denominator of output pulse ratio	0 to 32767˜ <10000>	

Standard default : < >

Servo PrNo.	Title	Setup range	Function/Content
44 * 	Numerator of output pulse ratio	1 to 32767 <10000>	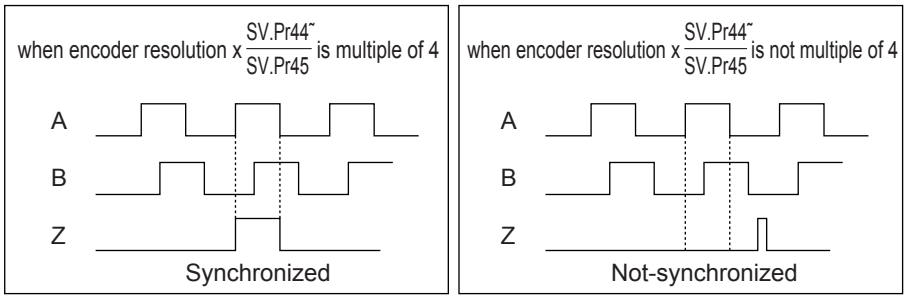 • **In the case the external scale pulse is output (When the control mode is the full-closed control mode and SV.Pr46 = 2, 3).** • SV.Pr45=0 : No division will be executed. • SV.Pr45≠0 : The pulse output resolution per one revolution can be divided by any ration according to the formula below. Pulse output resolution per one revolution = (SV.Pr45 (Denominator of output pulse ratio) / SV.Pr44 (Numerator of output pulse ratio)) x (The pulse of external scale output resolution / one resolution) **<Cautions>** • The setting of SV.Pr44>SV.Pr45 is invalid. (For the setting above, no division will be executed.) • Z-phase of the external scale is not reproduced.
45 *	Denominator of output pulse ratio	0 to 32767 <10000>	
46 *	Pulse output logic inversion	0 to 3 <0>	You can set up the B-phase logic and the output source of the pulse output (X5 OB+ : Pin-48, OB– : Pin-49). With this parameter, you can reverse the phase relation between the A-phase pulse and the B-phase pulse by reversing the B-phase logic.

Setup value	A-phase (OA)	at motor CCW rotation	at motor CW rotation
<0>, 2	B-phase(OB) non-reversal	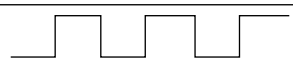	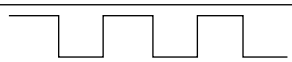
1, 3	B-phase(OB) reversal	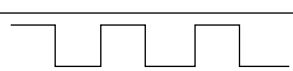	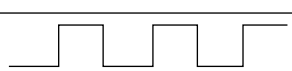

SV.Pr46	B-phase logic	Output source
<0>	Non-reversal	Encoder position
1	Reversal	Encoder position
2 *1	Non-reversal	External scale position
3 *1	Reversal	External scale position

*1 The output source of SV.Pr46=2, 3 is valid only at full-closed control.

<Notes>

- For servo parameters which No. have a suffix of "*", changed contents will be validated when you turn on the control power.
- Parameters which default values have a suffix of "*" will be automatically set up during real time auto-gain tuning. When you change manually, invalidate the real-time auto-gain tuning first then set, referring to P.151, "Release of Automatic Gain Adjusting Function" of Adjustment.

Parameter Setup

Standard default : < >

Servo PrNo.	Title	Setup range	Function/Content
4C	Smoothing filter	0 to 7˜ <1>˜ ˜	You can set the time constant of the primary delay firter covering the internal command pulse in 8 steps.
4D˜ *	FIR filter set up	0 to 31˜ <0>	You can set up the moving average times of the FIR filter covering the internal command pulse. (Setup value + 1) become average travel times.

Setup value	Time constant
0˜	No filter function˜
<1>˜	Time constant small˜
˜	˜
7	Time constant large

Parameters for Input Signals

Standard default : < >

Servo PrNo.	Title	Setup range	Function/Content
53	Over-travel inhibit input valid	0 to 1˜ <1>	Specify whether to enable or disable the CW/CCW over-travel inhibit input (CWL: CN X5 Pin 20, CCWL: CN X5 Pin 19).
54	Over-travel inhibit input logic	0 to 1˜ <0>	Set the logic of the CW/CCW over-travel inhibit input (CWL: CN X5 Pin 20, CCWL: CN X5 Pin 19).
55	Over-travel inhibit input operation ˜ setting	0 to3˜ <1>	Select an operation when the CW/CCW over-travel inhibit input (CWL: CN X5 Pin 20, CCWL: CN X5 Pin 19) has been made. An operation is not tripped before homing has completed, even if “0” or “1” is selected.
56	Home sensor ˜ input logic	0 to 1˜ <1>	Set the logic of the Home sensor input (Z-LS: CN X5 Pin 21).
57˜ *	Selecting ˜ the number of ˜ input points	0 to 3˜ <2>	Select the number of point specifying inputs (P1IN to P32IN: CN X5 Pin 3, 4, 5, 6, 7 and 8). The number of present position outputs (P1OUT to P32OUT: CN X5 Pin 29, 30, 31, 32, 33 and 34) also becomes the same as that of selected point specifying input.

Setup value	Description	
0˜ ˜	3 bits˜ ˜	P1IN to P4IN: CN X5 Pin 3, 4 and 5, and P1OUT to P4OUT: CN X5 Pin 29, 30 and 31 only are enabled.˜ The number of positioning points is 4 and a maximum number of points is 7.˜
1˜ ˜	4 bits˜ ˜	P1IN to P8IN: CN X5 Pin 3, 4, 5 and 6, and P1OUT to P8OUT: CN X5 Pin 29, 30, 31 and 32 only are enabled.˜ The number of positioning points is 12 and a maximum number of points is 15.˜
<2>˜ ˜	5 bits˜ ˜	P1IN to P16IN: CN X5 Pin 3, 4, 5, 6 and 7, and P1OUT to P16OUT: CN X5 Pin 29, 30, 31, 32 and 33 only are enabled.˜ The number of positioning points is 28 and a maximum number of points is 31.˜
3	6 bits	P1IN to P32IN: CN X5 Pin 3, 4, 5, 6, 7 and 8, and P1OUT to P32OUT: CN X5 Pin 29, 30, 31, 32, 33 and 34 only are enabled.˜ The number of positioning points is 60 and a maximum number of points is 63.

Setup value	Description
0˜	Disable˜
<1>	Enable

Setup value	Description
<0>˜	Over-travel is inhibited by opening the connection to COM–.˜
1	Over-travel is inhibited by closing the connection to COM–.

Setup value	Description
0˜	An operation decelerates, stops and trips after the stop.˜
<1>˜	An operation stops in deceleration time “0” and trips after the stop.˜
2˜	An operation decelerates and stops, but it does not trip after the stop.˜
3	An operation stops in deceleration time “0”, but it does not trip after the stop.

Setup value	Description
0˜	Home sensor input is enabled by opening the connection to COM–.˜
<1>	Home sensor input is enabled by closing the connection to COM–.

<Notes>

- For servo parameters which No. have a suffix of "*", changed contents will be validated when you turn on the control power.

Standard default : < >

Servo PrNo.	Title	Setup range	Function/Content
58	Point specifying ˜ input logic setting	0 to 1˜ <1>	Set the logic of the point specifying inputs (P1IN to P32IN: CN X5 Pin 3, 4, 5, 6, 7 and 8). **Setup value** / **Description** 0˜ / Point specifying inputs are enabled by opening the connection to COM–.˜ <1> / Point specifying inputs are enabled by closing the connection to COM–.
59	Multi-function ˜ input 1 Signal logic	0 to 1˜ <1>	Set the logic of the multi function input 1 (EX-IN1: CN X5 Pin 22). **Setup value** / **Description** 0˜ / Input is enabled by opening the connection to COM–.˜ <1> / Input is enabled by closing the connection to COM–.
5A˜ *	Multi-function ˜ input 1 Signal ˜ selection	0 to 6˜ <0>	Set the function of the multi function input 1 (EX-IN2: CN X5 Pin 22). **Setup value** / **Description** <0>˜ / Disabled (regardless of the logic setting in SV.Pr59).˜ 1˜ / Immediate stop˜ 2˜ / Temporary stop˜ 3˜ / Deceleration and stop˜ 4˜ / High-speed normal rotation jog˜ 5˜ / High-speed reverse rotation jog˜ 6 / Alarm is cleared.
5B	Multi-function ˜ input 2 Signal logic	0 to 1˜ <1>	Set the logic of the multi function input 2 (EX-IN2: CN X5 Pin 25). **Setup value** / **Description** 0˜ / Input is enabled by opening the connection to COM–.˜ <1> / Input is enabled by closing the connection to COM–.
5C˜ *	Multi-function ˜ input 2 Signal ˜ selection	0 to 6˜ <0>	Set the function of the multi function input 2 (EX-IN2: CN X5 Pin 25). **Setup value** / **Description** **<0>˜** / Disabled (regardless of the logic setting in SV.Pr5B).˜ 1˜ / Immediate stop˜ 2˜ / Temporary stop˜ 3˜ / Deceleration and stop˜ 4˜ / High-speed normal rotation jog˜ 5˜ / High-speed reverse rotation jog˜ 6 / Alarm is cleared. **<Note>** The setting of the multi function input 1 and that of the multi function input 2 must be different from each other. Moreover, if high-speed normal rotation jog and high-speed reverse rotation jog are assigned to the input 1 and input 2, respectively, the motor does not work when those turn on simultaneously.
5D	Servo-ON input valid	0 to 1˜ <1>	Specify whether to enable or disable the servo-on input (SRV-ON: CN X5 Pin 23). **Setup value** / **Description** ˜ 0˜ ˜ / Disable: ˜ A servo turns on after the power supply turns on, regardless of the state of servo-on input (SRV-ON: CN X5 Pin 23).˜ ˜ <1> / Enable: ˜ A servo turns on when the servo-on input (SRV-ON: CN X5 Pin 23) has been input after the power supply turns on.

Setting

Parameters for Velocity and Torque Limit

Standard default : < >

Servo PrNo.	Title	Setup range	Unit	Function/Content
5E˜ ˜ ˜ ˜	1st torque limit ˜ ˜ ˜ ˜	0 to 500˜ <500>˜ *2 ˜ ˜	%˜ ˜ ˜ ˜	You can set up the limit value of the motor output torque (SV.Pr5E : 1st torque, SV.Pr5F : 2nd torque). For the torque limit selection, refer to SV.Pr03 (Torque limit selection). This torque limit function limits the max. motor torque inside of the driver with parameter setup.˜ In normal operation, this driver permits approx. 3 times larger torque than the rated torque instantaneously. If this 3 times bigger torque causes any trouble to the load (machine) strength, you can use this function to limit the max. torque. • Setup value is to be given in % against the rated torque.˜ • Right fig. shows example of 150% setup with SV.Pr03=1.˜ • SV.Pr5E limits the max. torque for both CCW and CW directions. 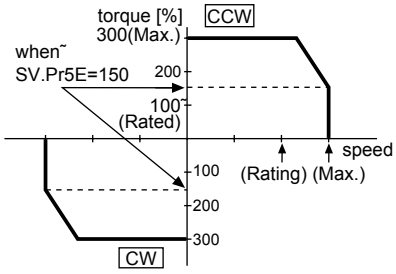 **<Caution>** You cannot set up a larger value to this parameter than the default setup value of "Max. output torque setup" of System parameter (which you cannot change through operation with PANATERM® or panel). Default value varies depending on the combination of the motor and the driver. For details, refer to P.78, "Setup of Torque Limit " of Preparation.
5F	2nd torque limit	0 to 500˜ <500>˜ *2	%	

<Note>

- For parameters which default. has a suffix of "*2", value varies depending on the combination of the driver and the motor.

Parameters for Sequence

Standard default : < >

Servo PrNo.	Title	Setup range	Unit	Function/Content
60	In-position range	0 to ˜ 32767˜ <131>	Pulse	You can set up the timing to feed out the positioning complete signal (COIN : CN X5, Pin-27). ˜ The positioning complete signal (COIN) will be fed out when the deviation counter pulse counts fall within ± (the setup value), after the position command entry is completed.˜ The setup unit should be the encoder pulse counts at the position control and the external scale pulse counts at the full-closed control. • Basic unit of deviation pulse is encoder "resolution", and varies per the encoder as below.˜ (1) 17-bit encoder : 2^{17} = 131072˜ (2) 2500P/r encoder : 4 X 2500 = 10000˜ **<Cautions>** 1. If you set up too small value to SV.Pr60, the time until the COIN signal is fed might become longer, or cause chattering at output.˜ 2. The setup of "Positioning complete range" does not give any effect to the final positioning accuracy. 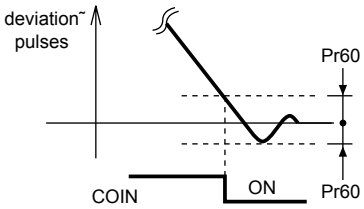

Standard default : < >

Servo PrNo.	Title	Setup range	Unit	Function/Content
64	Output signal selection	0 to 1˜ <0>	–˜	Set the function of the positioning completion output/in-deceleration output pin (COIN/DCLON: CN X5 Pin 27). Setup value: <0>˜ — COIN (Positioning completion output)˜ Setup value: 1 — DCLON (In-deceleration output)
65	Undervoltage error response at main power-off	0 to 1˜ <1>	–˜	You can select whether or not to activate Err13 (Main power supply under-voltage protection) function while the main power shutoff continues for the setup of Pr6D (Main power-off detection time). Setup value˜ — Action of main power low voltage protection ˜ 0˜ ˜ — Turns the servo off according to SV.Pr67 (Error response at main power-off).˜ <1> — When the main power is shut off during Servo-ON, the driver will trip due to Err13 (Main power supply under-voltage protection). **<Caution>** This parameter is invalid when SV.Pr6D (Main power-off detection time)=1000. Err13 (Main power supply under-voltage protection) is triggered when setup of SV.Pr6D is long and P-N voltage of the main converter falls below the specified value before detecting the main power shutoff, regardless of the SV.Pr65 setup.
67	Error response at main power-off	0 to 9˜ <0>	–˜	When SV.Pr65 (Undervoltage error response at main power-off) is 0, you can set up,˜ 1) the action during deceleration and after stalling˜ 2) the clearing of deviation counter content˜ after the main power is shut off. Setup value — Action: During deceleration / After stalling — Deviation counter content <0>˜ — DB˜ / DB˜ — Clear˜ 1˜ — Free-run˜ / DB˜ — Clear˜ 2˜ — DB˜ / Free-run˜ — Clear˜ 3˜ — Free-run˜ / Free-run˜ — Clear˜ 4˜ — DB˜ / DB˜ — Hold˜ 5˜ — Free-run˜ / DB˜ — Hold˜ 6˜ — DB˜ / Free-run˜ — Hold˜ 7˜ — Free-run˜ / Free-run˜ — Hold˜ 8˜ — Emergency stop˜ / DB˜ — Clear˜ 9 — Emergency stop / Free-run — Clear (DB: Dynamic Brake action)˜ **<Caution>** In case of the setup value of 8 or 9, torque limit during deceleration will be limited by the setup value of SV.Pr6E (Emergency stop torque set up).
68	Error response action	0 to 3˜ <0>	–˜	You can set up the action during deceleration or after stalling when some error occurs while either one of the protective functions of the driver is triggered. Setup value — ˜ Action ˜: During deceleration / After stalling — Deviation counter content <0>˜ — DB˜ / DB˜ — Hold˜ 1˜ — Free-run˜ / DB˜ — Hold˜ 2˜ — DB˜ / Free-run˜ — Hold˜ 3 — Free-run / Free-run — Hold (DB: Dynamic Brake action)˜ **<Caution>** The content of the deviation counter will be cleared when clearing the alarm.

Setting

Standard default : < >

Servo PrNo.	Title	Setup range	Unit	Function/Content
69	Sequence at ˜ Servo-OFF	0 to 9˜ <0>	–˜	You can set up,˜ 1) the running condition during deceleration and after stalling˜ 2) the clear treatment of deviation counter is set up. ˜ After the servo-ON signal input is turned off (SRV-ON : CN X5, Pin-23 shifting from ON to OFF).˜ The relation between the setup value of SV.Pr69 and the action/deviation counter clearance is same as that of SV.Pr67 (Error response at main power-off).˜ Refer to P.135, "Timing Chart"-Servo-ON/OFF action while the motor is at stall" of Operation Setting as well.
6A	Mechanical brake delay at motor standstill	0 to 100˜ <0>	2ms	You can set up the time from when the brake release signal (BRK-OFF : CN X5, Pin-10 and 11) turns off to when the motor is de-energized (Servo-free), when the motor turns to Servo-OFF while the motor is at stall. • Set up to prevent a micro-travel/ drop of the motor (work) due to the action delay time (tb) of the brake˜ • After setting up SV.Pr6a ≧ tb, ˜ then compose the sequence so as the driver turns to Servo-OFF after the brake is actually activated. 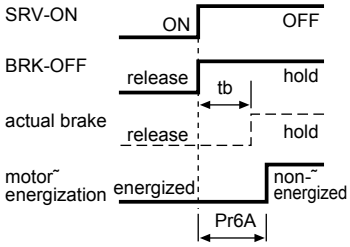 Refer to P.135, "Timing Chart"-Servo-ON/OFF Action While the Motor Is at Stall" of Operation Setting as well.
6B	Mechanical brake delay at motor in motion	0 to 100˜ <0>	2ms	You can set up time from when detecting the off of Servo-ON input signal (SRV-ON : CN X5, Pin-29) is to when external brake release signal (BRK-OFF : CN X5, Pin-10 and 11) turns off, while the motor turns to servo off during the motor in motion. • Set up to prevent the brake deterioration due to the motor running.˜ • At Servo-OFF during the motor is running, tb of the right fig. will be a shorter one of either SV.Pr6B setup time, or time lapse till the motor speed falls below 30r/min. 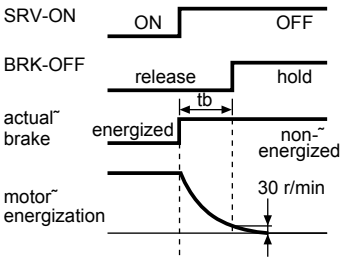 Refer to P.135, "Timing Chart"-Servo-ON/OFF action while the motor is in motion" of Operation Setting as well.

<Notes>

- For servo parameters which No. have a suffix of "*", changed contents will be validated when you turn on the control power.

Standard default : < >

Servo PrNo.	Title	Setup range	Unit	Function/Content
6C˜ *	External regenerative resistor set up	0 to 3˜ for˜ A, B-frame˜ <3>˜ for˜ C to F-frame˜ <0>	–˜	With this parameter, you can select either to use the built-in regenerative resistor of the driver, or to separate this built-in regenerative resistor and externally install the regenerative resistor (between RB1 and RB2 of Connector CN X2 in case of A to D-frame, between P and B2 of terminal block in case of E, F-frame). **Setup value** / **Regenerative resistor to be used** / **Regenerative processing and regenerative resistor overload** • <0>˜ (C, D, E and F-frame)˜ — Built-in resistor˜ — Regenerative processing circuit will be activated and regenerative resistor overload protection will be triggered according to the built-in resistor (approx. 1% duty).˜ • 1˜ — External resistor ˜ — The driver trips due to regenerative overload protection (Err18), when regenerative processing circuit is activated and its active ratio exceeds 10%, ˜ • 2˜ — External resistor ˜ — Regenerative processing circuit is activated, but no regenerative over-load protection is triggered.˜ • <3>˜ (A, B-frame) — No resistor — Both regenerative processing circuit and regenerative protection are not activated, and built-in capacitor handles all regenerative power. **<Remarks>** Install an external protection such as thermal fuse when you use the external regenerative resistor. ˜ Otherwise, the regenerative resistor might be heated up abnormally and result in burnout, regardless of validation or invalidation of regenerative over-road protection.˜ **<Caution>** When you use the built-in regenerative resistor, never to set up other value than 0. Don't touch the external regenerative resistor.˜ External regenerative resistor gets very hot, and might cause burning.
6D˜ *	Main power-off detection time	35 to 1000˜ <35>	2ms	You can set up the time to detect the shutoff while the main power is kept shut off continuously.˜ The main power off detection is invalid when you set up this to 1000.
6E	Emergency stop torque set up	0 to 500˜ <0>	%	You can set up the torque limit in case of emergency stop as below.˜ • During deceleration with the setup of 8 or 9 of SV.Pr67 (Error response at main power-off) ˜ • During deceleration with the setup of 8 or 9 of SV.Pr69 (Sequence at Servo-OFF) ˜ Normal torque limit is used by setting this to 0.˜ **<Caution>**˜ The stop is not due to the emergency stop input (EMG-STP: CN X5 Pin 2).

Parameters for Protective function

Standard default : < >

Servo PrNo.	Title	Setup range	Unit	Function/Content
70	Position deviation error level	0 to 32767˜ <25000>	256 x pulse	• You can set up the excess range of position deviation. ˜ • Set up with the encoder pulse counts at the position control and with the external scale pulse counts at the full-closed control. ˜ • Err24 (Position deviation excess protection) becomes invalid when you set up this to 0.
72	Overload level	0 to 500˜ <0>	%	• You can set up the over-load level. The overload level becomes 115 [%] by setting up this to 0. ˜ • Use this with 0 setup in normal operation. Set up other value only when you need to lower the over-load level. ˜ • The setup value of this parameter is limited by 115[%] of the motor rating.

Standard default : < >

Servo PrNo.	Title	Setup range	Unit	Function/Content
73	Setup of over-speed level	0 to 20000 <0>	r/min	• You can set up the over-speed level. The over-speed level becomes 1.2 times of the motor max. speed by setting up this to 0. • Use this with 0 setup in normal operation. Set up other value only when you need to lower the over-speed level. • The setup value of this parameter is limited by 1.2 times of the motor max. speed. **<Caution>** The detection error against the setup value is ±3 [r/min] in case of the 7-wire absolute encoder, and ±36 [r/min] in case of the 5-wire incremental encoder.

Parameters for Full-Closed Control

Standard default : < >

Servo PrNo.	Title	Setup range	Unit	Function/Content
78 * (F)	Numerator of external scale ratio	0 to 32767 <10000>	–	You can setup the ratio between the encoder resolution and the external scale resolution at full-closed control. $\frac{\text{Encoder resolution per one motor revolution}}{\text{External scale resolution per one motor revolution}} = \frac{\text{SV.Pr78 X } 2^{\text{SV.Pr79}}}{\text{SV.Pr7A}}$ • SV.Pr78= 0 Numerator equals to encoder resolution, and you can setup the external scale resolution per one motor revolution with SV.Pr7A. • SV.Pr78 ≠ 0, Setup the ratio between the external scale resolution and the encoder resolution per one motor revolution according to the above formula. **<Caution>** • Upper limit of numerator value after calculation is 131072. Setup exceeding this value will be invalidated, and 131702 will be the actual numerator. • The actual calculation of numerator is “numerator of external scale division (SV.Pr78) x 2 to the nth power (a set value of SV.Pr79)”.
79 * (F)	Multiplier of numerator of external scale ratio	0 to 17 <0>	–	
7A * (F)	Denominator of external scale ratio	1 to 32767 <10000>	–	
7B * (F)	Hybrid deviation error level	1 to 10000 <100>	16 x external scale pulse	• You can setup the permissible gap (hybrid deviation) between the present motor position and the present external scale position.
7C * (F)	External scale direction	0 to 1 <0>	–	You can set up the logic of the absolute data of the external scale. **Setup value** / **Content** 0: Serial data will increase when the detection head travels to the right viewed from the mounting side. (+ count) 1: Serial data will decrease when the detection head travels to the right viewed from the mounting side. (– count) **<Caution>** Unlike 16.Pr50 (setup of operating direction), this parameter depends on the mounting direction of external scale. Please note that the full-closed control cannot be executed appropriately in a reverse setting.

<Notes>

- Anything marked with “(F)” on the servo parameter number (Servo PrNo.) can be used only for the “Full-Closed Control”.
- For servo parameters which No. have a suffix of "*", changed contents will be validated when you turn on the control power.

List of 16-bit Positioning Parameters

Parameters for Motor speed

Standard default : < >

16-bit positioning PrNo.	Title	Setup range	Unit	Function/Content
00	1st speed	0 to 6000˜ <0>	r/min	Specify a speed when Speed Selection 1 has been selected.
01	2nd speed	0 to 6000˜ <0>	r/min	Specify a speed when Speed Selection 2 has been selected.
02	3rd speed	0 to 6000˜ <0>	r/min	Specify a speed when Speed Selection 3 has been selected.
03	4th speed	0 to 6000˜ <0>	r/min	Specify a speed when Speed Selection 4 has been selected.
04	5th speed	0 to 6000˜ <0>	r/min	Specify a speed when Speed Selection 5 has been selected.
05	6th speed	0 to 6000˜ <0>	r/min	Specify a speed when Speed Selection 6 has been selected.
06	7th speed	0 to 6000˜ <0>	r/min	Specify a speed when Speed Selection 7 has been selected.
07	8th speed	0 to 6000˜ <0>	r/min	Specify a speed when Speed Selection 8 has been selected.
08	9th speed	0 to 6000˜ <0>	r/min	Specify a speed when Speed Selection 9 has been selected.
09	10th speed	0 to 6000˜ <0>	r/min	Specify a speed when Speed Selection 10 has been selected.
0A	11th speed	0 to 6000˜ <0>	r/min	Specify a speed when Speed Selection 11 has been selected.
0B	12th speed	0 to 6000˜ <0>	r/min	Specify a speed when Speed Selection 12 has been selected.
0C	13th speed	0 to 6000˜ <0>	r/min	Specify a speed when Speed Selection 13 has been selected.
0D	14th speed	0 to 6000˜ <0>	r/min	Specify a speed when Speed Selection 14 has been selected.
0E	15th speed	0 to 6000˜ <0>	r/min	Specify a speed when Speed Selection 15 has been selected.
0F	16th speed	0 to 6000˜ <0>	r/min	Specify a speed when Speed Selection 16 has been selected.

Parameters for Acceleration and Deceleration

Standard default : < >

16-bit positioning PrNo.	Title	Setup range	Unit	Function/Content
10	1st acceleration	0 to 10000˜ <0>	ms	Specify acceleration when Acceleration Selection 1 has been selected.˜ Specify an acceleration time in a range between 0 to 3000 [r/min].˜ * There is a maximum of 10% difference between a calculation value in the setup and the actual acceleration time.
11	1st S-shaped ˜ acceleration	0 to 1000˜ <0>	ms	Specify S-shaped acceleration when Acceleration Selection 1 has been selected. Specify the S-shaped acceleration during acceleration time. For details, refer to page 131.˜ If “0” is specified, the linear acceleration time is enabled.
12	1st deceleration	0 to 10000˜ <0>	ms	Specify deceleration when Deceleration Selection 1 has been selected.˜ Specify a deceleration time in a range between 3000 to 0 [r/min].˜ * There is a maximum of 10% difference between a calculation value in the setup and the actual deceleration time.
13	1st S-shaped ˜ deceleration	0 to 1000˜ <0>	ms	Specify S-shaped deceleration when Deceleration Selection 1 has been selected. Specify the S-shaped deceleration during deceleration time. For details, refer to page 131.˜ If the S-shaped deceleration is set to “0”, the linear deceleration time is enabled.
14	2 nd acceleration	0 to 10000˜ <0>	ms	Specify acceleration when Acceleration Selection 2 has been selected.˜ Specify an acceleration time in a range between 0 to 3000 [r/min].˜ * There is a maximum of 10% difference between a calculation value in the setup and the actual acceleration time.

Standard default : < >

16-bit positioning PrNo.	Title	Setup range	Unit	Function/Content
15	2nd S-shaped ˜ acceleration	0 to 1000˜ <0>	ms	Specify S-shaped acceleration when Acceleration Selection 2 has been selected. Specify the S-shaped acceleration during acceleration time. For details, refer to page 131.˜ If “0” is specified, the linear acceleration time is enabled.
16	2nd deceleration	0 to 10000˜ <0>	ms	Specify deceleration when Deceleration Selection 2 has been selected.˜ Specify a deceleration time in a range between 3000 to 0 [r/min].˜ * There is a maximum of 10% difference between a calculation value in the setup and the actual deceleration time.
17	2nd S-shaped ˜ deceleration	0 to 1000˜ <0>	ms	Specify S-shaped deceleration when Deceleration Selection 2 has been selected. Specify the S-shaped deceleration during deceleration time. For details, refer to page 131.˜ If the S-shaped deceleration is set to “0”, the linear deceleration time is enabled.
18	3rd acceleration	0 to 10000˜ <0>	ms	Specify acceleration when Acceleration Selection 3 has been selected.˜ Specify an acceleration time in a range between 0 to 3000 [r/min].˜ * There is a maximum of 10% difference between a calculation value in the setup and the actual acceleration time.
19	3rd S-shaped ˜ acceleration	0 to 1000˜ <0>	ms	Specify S-shaped acceleration when Acceleration Selection 3 has been selected. Specify the S-shaped acceleration during acceleration time. For details, refer to page 131.˜ If “0” is specified, the linear acceleration time is enabled.
1A	3rd deceleration	0 to 10000˜ <0>	ms	Specify deceleration when Deceleration Selection 3 has been selected.˜ Specify a deceleration time in a range between 3000 to 0 [r/min].˜ * There is a maximum of 10% difference between a calculation value in the setup and the actual deceleration time.
1B	3rd S-shaped ˜ deceleration	0 to 1000˜ <0>	ms	Specify S-shaped deceleration when Deceleration Selection 3 has been selected. Specify the S-shaped deceleration during deceleration time. For details, refer to page 131.˜ If the S-shaped deceleration is set to “0”, the linear deceleration time is enabled.
1C	4th acceleration	0 to 10000˜ <0>	ms	Specify acceleration when Acceleration Selection 4 has been selected.˜ Specify an acceleration time in a range between 0 to 3000 [r/min].˜ * There is a maximum of 10% difference between a calculation value in the setup and the actual acceleration time.
1D	4th S-shaped ˜ acceleration	0 to 1000˜ <0>	ms	Specify S-shaped acceleration when Acceleration Selection 4 has been selected. Specify the S-shaped acceleration during acceleration time. For details, refer to page 131.˜ If “0” is specified, the linear acceleration time is enabled.
1E	4th deceleration	0 to 10000˜ <0>	ms	Specify deceleration when Deceleration Selection 4 has been selected.˜ Specify a deceleration time in a range between 3000 to 0 [r/min].˜ * There is a maximum of 10% difference between a calculation value in the setup and the actual deceleration time.
1F	4th S-shaped ˜ deceleration	0 to 1000˜ <0>	ms	Specify S-shaped deceleration when Deceleration Selection 4 has been selected. Specify the S-shaped deceleration during deceleration time. For details, refer to page 131.˜ If the S-shaped deceleration is set to “0”, the linear deceleration time is enabled.

Parameters for Homing

Standard default : < >

16-bit positioning PrNo.	Title	Setup range	Unit	Function/Content
30	Homing speed (fast)	0 to 6000˜ <0>	r/min	Specify a high operation speed for the homing.
31	Homing speed (slow)	0 to 6000˜ <0>	r/min	Specify a low operation speed for the homing.
32	Homing offset speed	0 to 6000˜ <0>	r/min	Specify a speed used for an offset operation for the homing.
33	Homing ˜ acceleration	0 to 10000˜ <0>	ms	Specify acceleration for the homing.˜ Specify an acceleration time in a range between 0 to 3000 [r/min].˜ * There is a maximum of 10% difference between a calculation value in the setup and the actual acceleration time.
34	Homing ˜ deceleration	0 to 10000˜ <0>	ms	Specify deceleration for the homing.˜ Specify a deceleration time in a range between 3000 to 0 [r/min].˜ * There is a maximum of 10% difference between a calculation value in the setup and the actual deceleration time.

<Notes>

- For 16-bit positioning parameters which No. have a suffix of "*", changed contents will be validated when you turn on the control power.

Standard default : < >

16-bit positioning PrNo.	Title	Setup range	Unit	Function/Content
35	Homing direction	0 to 1˜ <0>	–˜	Specify an operating direction of homing. Setup value / Description <0>˜ Detects a home position in a positive direction.˜ 1 Detects a home position in a negative direction.
36	Homing type	0 to 7˜ <0>	–˜	Select how to perform the homing. Setup value / Description <0>˜ Home sensor + Z phase (based on the front end)˜ 1˜ Home sensor (based on the front end)˜ 2˜ Home sensor + Z phase (based on the rear end)˜ 3˜ Limit sensor + Z phase˜ 4˜ Limit sensor˜ 5˜ Z phase homing˜ 6˜ Bumping homing˜ 7 Data set
37	Home complete type	0 to 1˜ <0>	–˜	Select an operation when homing has completed. Setup value / Description <0>˜ Set a current position to "- home offset" when the machine has returned to its home position.˜ 1 The machine moves according to the home offset when homing has completed.
38˜ *	Homing skip	0 to 1˜ <0>	–˜	If "1" is specified, a step operation can be performed without homing. In this case, a position when the power supply has turned on is defined as a home position. Setup value / Description <0>˜ Homing required˜ 1 Homing not required **<Note>˜** If the absolute mode (17-bit absolute encoder is used and SV.Pr08 (absolute encoder setting) is 0.2) is enabled, "Homing not required" is specified regardless of this parameter.
39	Bumping detection time	0 to 10000˜ <0>	ms	Specify home position recognition time for bumping homing.
3A	Torque limit for bumping homing	0 to 100˜ <0>	%	Specify a homing torque limit for bumping homing.
3B	Homing Z-phase count setting	0 to 100˜ <0>	–˜	Specify a Z phase at which the machine stops if the machine stops at the Z phase when returning to its home position. If "0" is specified, the machine stops at the first Z phase. (The same operation when "1" is specified.)

Parameters for Jog operation

Standard default : < >

16-bit positioning PrNo.	Title	Setup range	Unit	Function/Content
40	Jog speed (low)	0 to 6000˜ <0>	r/min	Specify a speed for a low-speed jog operation.˜ **<Note>** A low-speed jog can be started only from the console.˜ For a jog operation with a specified point, a set value for a high-speed jog is used.
41	Jog speed (high)	0 to 6000˜ <0>	r/min	Specify a speed for a high-speed jog operation.
42	Acceleration ˜ setting in jog ˜ operation	0 to 10000˜ <0>	ms	Specify acceleration for a jog operation.˜ Specify an acceleration time in a range between 0 to 3000 [r/min].˜ * There is a maximum of 10% difference between a calculation value in the setup and the actual acceleration time.
43	Setting of S-shaped acceleration in jog operation	0 to 1000˜ <0>	ms	Specify S-shaped acceleration for a jog operation.˜ Specify the S-shaped control time during acceleration time. For details, refer to page 131.˜ If "0" is specified, the linear acceleration control is enabled.

Standard default : < >

16-bit positioning PrNo.	Title	Setup range	Unit	Function/Content
44	Setting of ˜ deceleration ˜ in jog operation	0 to 10000˜ <0>	ms	Specify deceleration for a jog operation.˜ Specify a deceleration time in a range between 3000 to 0 [r/min].˜ * There is a maximum of 10% difference between a calculation value in the setup and the actual deceleration time.
45	Setting of S-shaped deceleration in jog operation	0 to 1000˜ <0>	ms	Specify S-shaped deceleration for a jog operation.˜ Specify the S-shaped control time during deceleration time. For details, refer to page 131.˜ If “0” is specified, the linear deceleration control is enabled.

Other Parameters

Standard default : < >

16-bit positioning PrNo.	Title	Setup range	Unit	Function/Content
48	Teaching movement amount setting	0 to 32767˜ <0>	Pulse	Specify the number of pulses for movement at every pressing an operation key when teaching a position data using the console.
49	Instantaneous stop deceleration time	0 to 10000˜ <0>	ms	Specify a deceleration time when an immediate stop command assigned to the multi function input pin has been input. Specify a deceleration time in a range between 3000 to 0 [r/min].˜ For “0”, the speed command changes into a step shape.˜ * There is a maximum of 10% difference between a calculation value in the setup and the actual deceleration time.
50˜ *	Operation direction setting	0 to 1˜ <1>	–˜	Specify a relation between a positive/negative direction of point position data and command position monitor and a CW/CCW rotation direction. Setup value: 0˜ — CCW is a negative direction and CW is a positive direction.˜ Setup value: <1>˜ — CCW is a positive direction and CW is a negative direction. If “0” is specified, a sign of the command pulse sum shown on the monitor screen of the console or “PANATERM®” is reversed. However, for a value of the feedback pulse sum, CCW is a positive direction always.
51˜ *	Wrap around ˜ permission	0 to 1˜ <0>	–˜	Select an operation when a current position has overflowed. Setup value: <0>˜ — An alarm is given and a trip is caused (Error code No. 70).˜ Setup value: 1 — No alarm is given and an operation continues. **<Note>˜** If “1” is specified to this parameter, although an error does not occur when wrap around happens, an absolute position cannot be guaranteed. If wrap around is disabled, use the system in a relative position only.
52˜ *	Sequential ˜ operation setting	0 to 1˜ <0>	–˜	Specify whether to enable or disable a sequential operation.˜ For the details of sequential operation, refer to page 130. Setup value: <0>˜ — Disable a sequential operation.˜ Setup value: 1 — Enable a sequential operation.
53	Sequential operation maximum point number	0 to 60˜ <0>	–˜	Specify a maximum point number for a sequential operation.˜ This is enabled only when a sequential operation is enabled (16.Pr52 = 1). If “0” is specified, this is the same with “1”˜
54˜ *	Block operation type	0 to 1˜ <0>	–˜	Specify a type of block operation.˜ For the details of block operation, refer to page 125. Setup value: <0>˜ — Continuous block operation.˜ Setup value: 1 — Combined block operation. **<Note>** If “1” is specified, the S-shaped acceleration/deceleration becomes unavailable.

<Notes>

- For 16-bit positioning parameters which No. have a suffix of "*", changed contents will be validated when you turn on the control power.

List of 32-bit Positioning Parameters

Standard default : < >

32-bit positioning PrNo.	Title	Setup range	Unit	Function/Content
00˜ *	Home offset	–2147483647 to ˜ 2147483647˜ <0>	Pulse	Specify the home offset when homing has completed.˜ For details, refer to page 124.
01˜ *	Setting of ˜ maximum ˜ movement in plus direction	0 to 2147483647˜ <0>	Pulse	Specify a maximum travel in a positive direction.˜ If “0” is specified, a positive direction error code No. 72 (maximum travel limit error protection) is disabled.˜ The error code No. 72 is shown when a command position has become larger than this parameter value during a step operation or jog operation after homing has completed.˜ **<Note>**˜ When homing has not yet completed or 16.Pr51 (wraparound accepted) is “1”, the error code No. 72 is disabled. Also, the error code No. 72 is not detected when an operation stops.
02˜ *	Setting of ˜ maximum ˜ movement in minus direction	–2147483648 to 0˜ < 0>	Pulse	Specify a maximum travel in a negative direction.˜ If “0” is specified, a negative direction error code No. 72 (maximum travel limit error protection) is disabled.˜ The error code No. 72 is shown when a command position has become smaller than this parameter value during a step operation or jog operation after homing has completed.˜ **<Note>** When homing has not yet completed or 16.Pr51 (wraparound accepted) is “1”, the error code No. 72 is disabled. Also, the error code No. 72 is not detected when an operation stops.
03˜ *	Movement per ˜ rotation in rotation coordinates	0 to 2147483647˜ <0>	Pulse	Specify a travel (the number of pulses) per rotation in a step operation when a rotary axis is specified (operation mode: Rotary).˜ An available range is between 2 and 1073741824. If any value out of this range is specified, an error code No. 69 (undefined data error protection) is shown when an operation starts.

List of Step Parameters

Standard default : < >

Step PrNo.	Title	Setup range		Unit	Function/Content
		PANATERM display	Console display		
01H to ˜ 3CH	Operation mode˜ ˜ ˜ ˜ ˜	ABS/INC/Rotary/˜ Dwelltime˜ <INC>˜ ˜ ˜	AbS/inc/rot/d_t˜ <inc>˜ ˜ ˜ ˜	–˜ ˜ ˜ ˜ ˜	Specify how to position.˜ Absolute operation (ABS, Abs), incremental operation (INC, Inc), rotary axis operation (Rotary, rot), dwell timer operation (Dwell time, d_t).˜
	Position/waiting time˜ ˜	–2147483648 to ˜ 2147483647˜ <0>˜	–2147483648 to ˜ 2147483647˜ <0>˜	Pulse˜ /10ms˜ ˜	Input a coordinate data for positioning.˜ If “Dwelltime” is selected as an operation mode, specify a waiting time.˜
	Speed˜ ˜	V1 to V16˜ <V1>˜	VEL1 to VEL16˜ <VEL1>˜	–˜ ˜	Select a speed selection number for positioning.˜ Specify a speed by 16-bit positioning parameter.˜
	Acceleration˜ ˜ ˜	A1 to A4˜ <A1>˜ ˜	Acc1 to Acc4˜ <Acc1>˜ ˜	–˜ ˜ ˜	Select a acceleration selection number for positioning.˜ Specify a speed by 16-bit positioning parameter.˜
	Deceleration˜ ˜ ˜	D1 to D4˜ <D1>˜ ˜	dEc1 to dEc4˜ <dEc1>˜ ˜	–˜ ˜ ˜	Select a deceleration selection number for positioning.˜ Specify a speed by 16-bit positioning parameter.˜
	Block	Single/Block˜ <Single>	SinGLE/BLoc˜ <SinGLE>	–˜	Select a single operation or block operation.

Setup of Torque Limit

Torque limit setup range is 0 to 300 and default is 300 except the combinations of the motor and the driver listed in the table below.

Frame	Model No.	Applicable motor	Max. value of SV.Pr5E,5F
A-~ frame~	MADDCT1105P~	MSMD5AZP1*~	300~
~	~	MSMD5AZS1*~	300~
~	MADDT1107P~	MSMD011P1*~	300~
~	~	MSMD011S1*~	300~
~	~	MQMA011P1*~	300~
~	~	MQMA011S1*~	300~
~	MADDT1205P~	MSMD5AZP1*~	300~
~	~	MSMD5AZS1*~	300~
~	~	MSMD012P1*~	300~
~	~	MSMD012S1*~	300~
~	~	MQMA012P1*~	300~
~	~	MQMA012S1*~	300~
~	MADDT1207P~	MSMD022P1*~	300~
~	~	MSMD022S1*~	300~
~	~	MAMA012P1*~	500~
~	~	MAMA012S1*~	500~
~	~	MQMA022P1*~	300~
~	~	MQMA022S1*~	300~
B-~ frame~	MBDDT2110P~	MSMD021P1*~	300~
~	~	MSMD021S1*~	300~
~	~	MQMA021P1*~	300~
~	~	MQMA021S1*~	300~
~	MBDDT2210P~	MSMD042P1*~	300~
~	~	MSMD042S1*~	300~
~	~	MAMA022P1*~	500~
~	~	MAMA022S1*~	500~
~	~	MQMA042P1*~	300~
~	~	MQMA042S1*~	300~
C-~ frame~	MCDDT3120P~	MSMD041P1*~	300~
~	~	MSMD041S1*~	300~
~	~	MQMA041P1*~	300~
~	~	MQMA041S1*~	300~
~	MCDDT3520P~	MSMD082P1*~	300~
~	~	MSMD082S1*~	300~
~	~	MAMA042P1*~	500~
~	~	MAMA042S1*~	500~
D-~ frame	MDDDT3530P~	MFMA042P1*~	300~
	~	MFMA042S1*~	300~
	~	MHMA052P1*~	255~
	~	MHMA052S1*~	255~
	~	MDMA102P1*~	300~
	~	MDMA102S1*~	300~
	~	MHMA102P1*~	300~
	~	MHMA102S1*~	300~
	MDDDT5540P	MGMA092P1*~	225~
		MGMA092S1*	225

Frame	Model No.	Applicable motor	Max. value of SV.Pr5E,5F
D-~ frame~	MDDDT5540P~	MSMA102P1*~	300~
~	~	MSMA102S1*~	300~
~	~	MHMA152P1*~	300~
~	~	MHMA152S1*~	300~
~	~	MDMA152P1*~	300~
~	~	MDMA152S1*~	300~
~	~	MSMA152P1*~	300~
~	~	MSMA152S1*~	300~
~	~	MFMA152P1*~	300~
~	~	MFMA152S1*~	300~
~	~	MAMA082P1*~	500~
~	~	MAMA082S1*~	500~
~	~	MDMA202P1*~	300~
~	~	MDMA202S1*~	300~
E-~ frame~	MEDDT7364P~	MSMA202P1*~	300~
~	~	MSMA202S1*~	300~
~	~	MHMA202P1*~	300~
~	~	MHMA202S1*~	300~
~	~	MFMA252P1*~	300~
~	~	MFMA252S1*~	300~
~	~	MGMA202P1*~	230~
~	~	MGMA202S1*~	230~
F-~ frame	MFDDTA390P~	MDMA302P1*~	300~
	~	MDMA302S1*~	300~
	~	MHMA302P1*~	300~
	~	MHMA302S1*~	300~
	~	MSMA302P1*~	300~
	~	MSMA302S1*~	300~
	~	MGMA302P1*~	235~
	~	MGMA302S1*~	235~
	MFDDTB3A2P	MDMA402P1*~	300~
		MDMA402S1*~	300~
		MHMA402P1*~	300~
		MHMA402S1*~	300~
		MSMA402P1*~	300~
		MSMA402S1*~	300~
		MFMA452P1*~	300~
		MFMA452S1*~	300~
		MGMA452P1*~	255~
		MGMA452S1*~	255~
		MDMA502P1*~	300~
		MDMA502S1*~	300~
		MHMA502P1*~	300~
		MHMA502S1*~	300~
		MSMA502P1*~	300~
		MSMA502S1*	300

- The above limit applies to SV.Pr5E, 1st torque limit setup, SV.Pr5F, 2nd torque limit setup and SV.Pr6E, Torque setup at emergency stop.

<Caution>

When you change the motor model, above max. value may change as well. Check and reset the setup values of SV.Pr5E, SV.Pr5F and SV.Pr6E.

Cautions on Replacing the Motor

As stated above, torque limit setup range might change when you replace the combination of the motor and the driver. Pay attention to the followings.

1.When the motor torque is limited,

When you replace the motor series or to the different wattage motor, you need to reset the torque limit setup because the rated toque of the motor is different from the previous motor. (see e.g.1)

e.g.1)

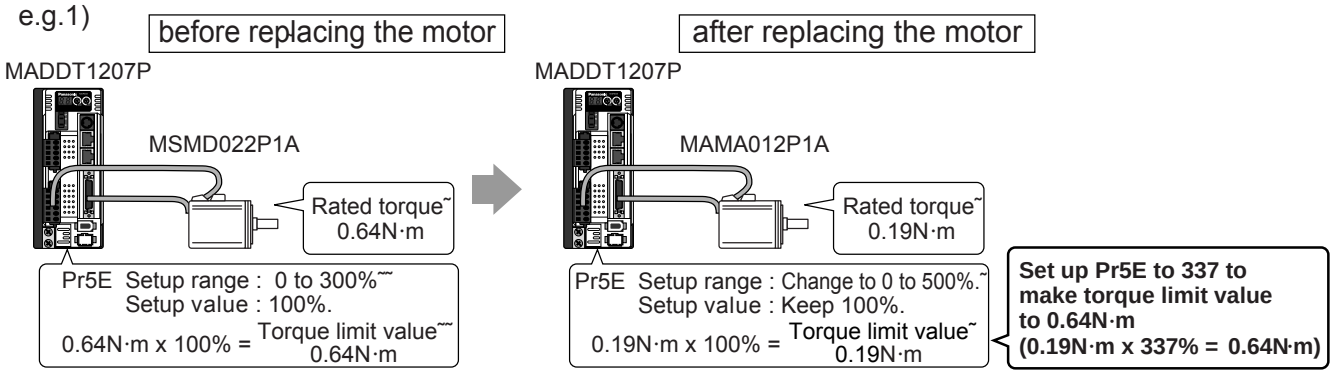

2.When you want to obtain the max. motor torque,

You need to reset the torque limiting setup to the upper limit, because the upper limit value might be different from the previous motor. (see e.g.2)

e.g.2)

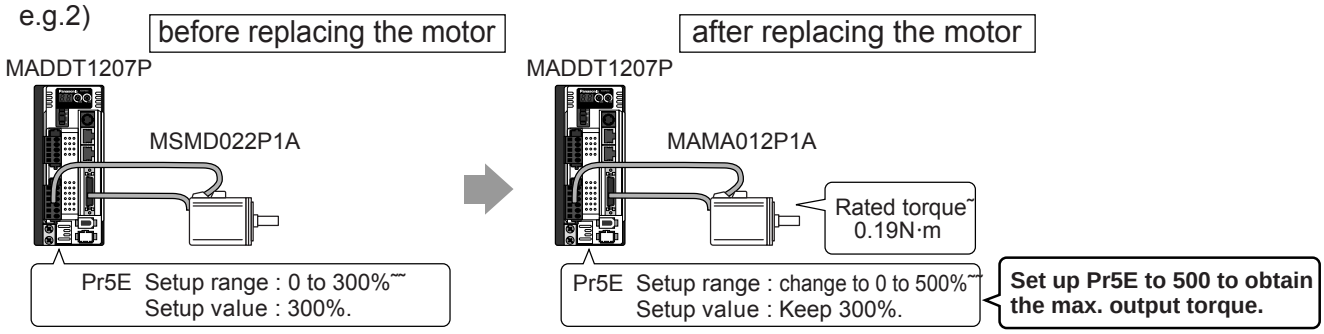

How to Use the Console

Setup with the Console

Composition of Display/Touch panel

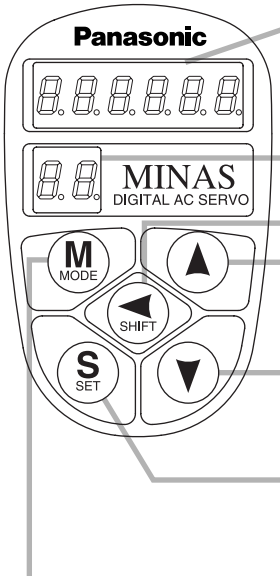

Display LED (6-digit)
All of LED will flash when error occurs, and switch to error display screen. ˜

Display LED (in 2 digits)
Parameter No. is displayed at parameter setup mode. Point No. is displayed at teaching mode.˜

SHIFT Button
Press this to shift the digit for data change.˜

(▲)(▼) Button
Press these to change data or execute selected action of parameter.˜
Numerical value increases by pressing ,(▲),˜
decreases by pressing (▼).˜

SET Button
Press this to shift each mode which is selected by mode switching button to EXECUTION display.

Mode Switching Button Press this to switch 7 kinds of mode.˜

1) Monitor mode˜
2) Teaching mode˜
   - Target position settings established ˜ by teaching˜
   - Test operation˜
3) Parameter setup mode˜
4) EEPROM write mode
5) Normal auto-gain tuning mode˜
6) Auxiliary function mode˜
   - Alarm clear˜
   - Absolute encoder clear˜
7) Copy mode˜
   - Copying of parameters from the driver to the console.
   - Copying of parameters from the console to the driver.

Initial Status of the Console Display (7 Segment LED)

Turn on the power of the driver while inserting the console connector to the driver main body, or inserting the console connector to CN X4 connector.

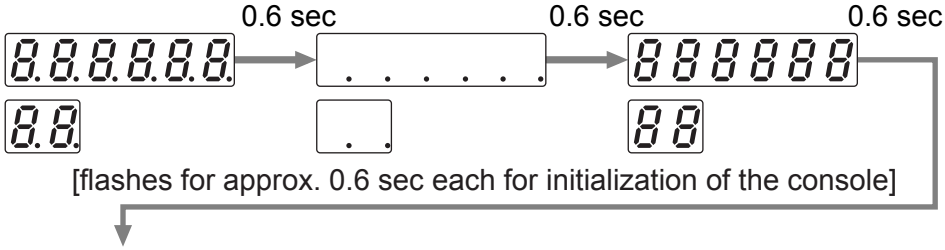

- **In case of communication with RS232 only**

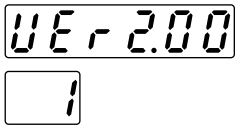

… Displays version No. of micro computer of the console. ˜
(Displayed figures vary depending on the version)˜
˜

1 sec

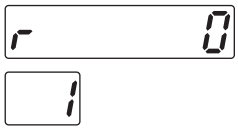

… Initial display of LED˜
(Determined by the setup of SV.Pr01, "Initial Status of LED".)

- **Release of RS232 communication error**
  When RS232 communication error occurs as the Fig, below shows, ˜
  release it by pressing (S SET) and (◀ SHIFT) at the same time.

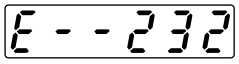

Mode Change

The modes below are available in this console. To switch a mode, press (S SET) once in the initial state to enter the **SELECTION display** screen and press (M MODE).

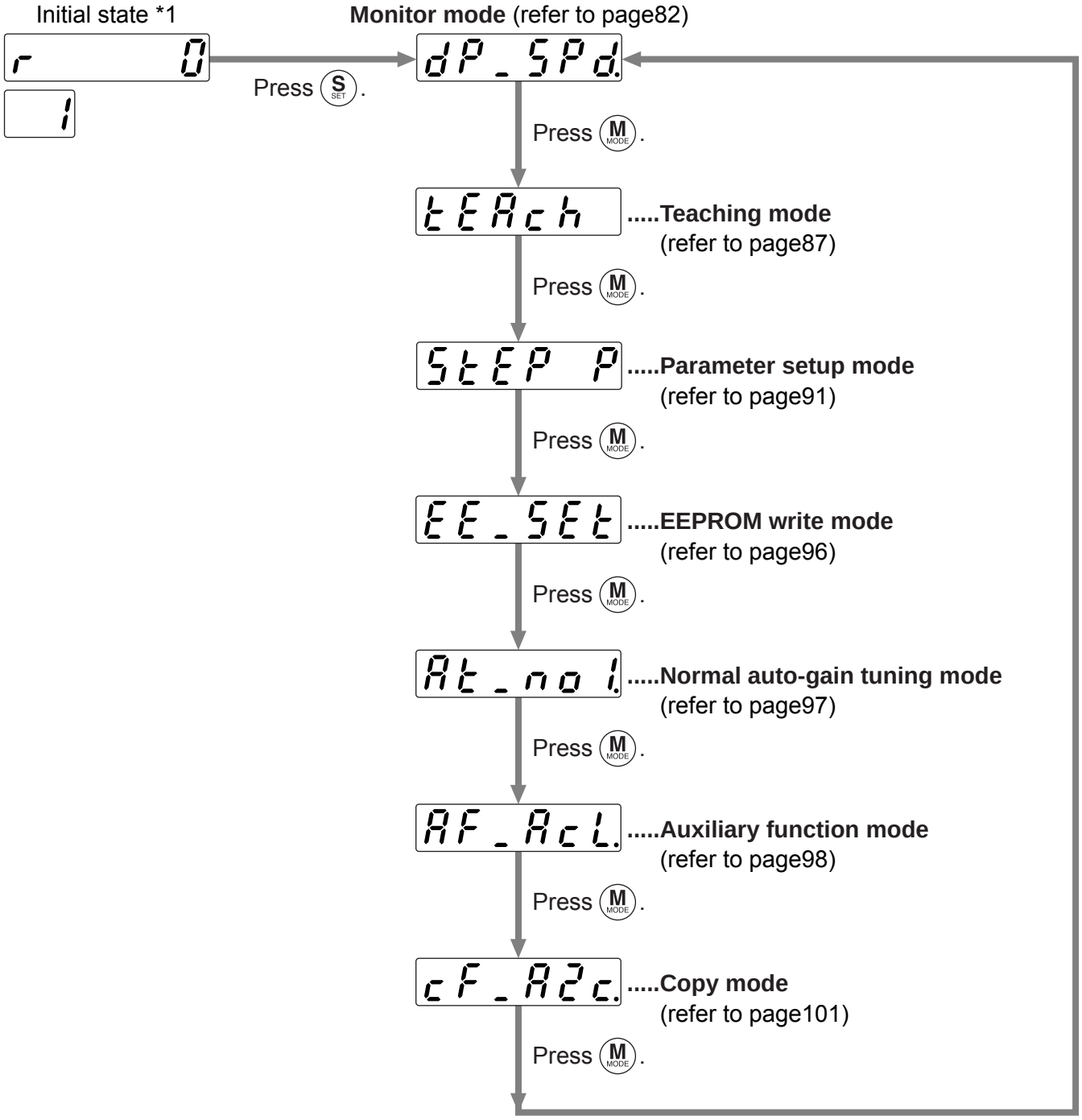

Show a target mode to be executed, select it by the (▲)(▼) button and press (S SET) to enter the **EXECUTION display** screen.

<Note>

*1: Depends on the settings of the initial LED state of SV.Pr01.

How to Use the Console

Monitor Mode

SELECTION display

Display shifts toward the arrowed direction by pressing ▲ and reversed direction by pressing ▼.

dP_EPS.	Positional deviation
dP_SPd.	Motor rotational speed
dP_tr9.	Torque output
dP_cnt.	Control mode
dP_io.	I/O signal status
dP_Err.	Error factor, history
dP_no.	For manufacturer's use
dP_rn.	Alarm
dP_rG.	Regenerative load factor
dP_oL.	Overload factor
dP_Jrt.	Inertia ratio
dP_nPS.	Feedback pulse sum
dP_cPS.	Command pulse sum
dP_FEr.	External scale deviation
dP_FPS.	External scale feedback pulse sum
dP_Aud.	Automatic motor recognizing function
dP_idc.	Selection of communication

S SET

(SET button)

EXECUTION display

Display example	Description	Pages to refer
P 5	(5 deviation pulses)	P.83
r 1000	(1000r/min)	P.83
t 100.0	(Torque output 100%)	P.83
PoScnt	(Position control mode)	P.83
inD0. A	(Input signal No.0 : Active)	P.83
Err. --	(No error currently)	P.85
b.-0 .00		
rn----	(No alarm)	P.85
rG 30.0	(30% of permissible regenerative power)	P.86
oL 28.0	(28% of overload factor)	P.86
J 100	(Inertia ratio 100%)	P.86
50	(Feedback pulse sum is 50 pulses.)	P.86
10	(Command pulse sum is 10 pulses.)	P.86
FE 0	(External scale deviation is 0 pulses.)	P.86
0	External scale feedback pulse sum is 0 pulses.	P.86
Aud on	(Automatic motor recognizing function is validated.)	P.86
rS-232	(RS232 communication)	P.86

M MODE (Mode switch button)

Teaching Mode

P.87

Display of Position Deviation, Motor Rotational Speed and Torque Output

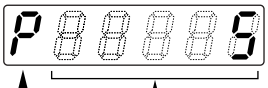

P .....Positional deviation (cumulative pulse counts of deviation counter)
- – display : generates rotational torque of CW direction (viewed from shaft end)
  no display : generates rotational torque of CCW direction (viewed from shaft end)

r .....Rotational speed of the motor unit [r/min]
- – display : CW rotation, no display : CCW rotation

t .....Torque command unit [%] (100 for rated torque)
- – display : CW rotation, no display : CCW rotation

<Note>

" + " is not displayed on LED, but only " - " appears.

Display of Control Mode

PoScnt .....Position control mode FcLcnt .....Full-closed control mode

Display of I/O Signal Status

Displays the control input and output signal to be connected to CN X5 connector.

A .....Active˜
(This signal is valid)˜

- .....Inactive˜
(This signal is invalid)

Signal No. ˜
(Hexadecimal number, 0 to 1F)

in .....Input signal˜
˜

ot .....Output signal

Select the signal No. to be monitored by pressing ▲▼.

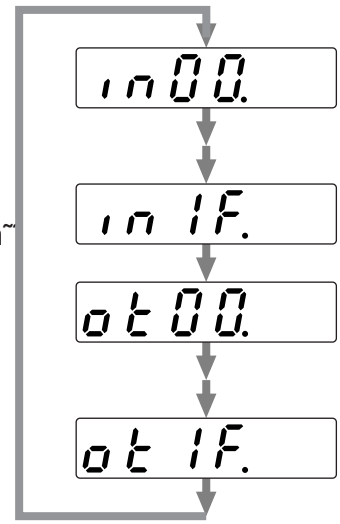

(Lowest place˜ No. of input ˜ signal)

(Highest place˜ No. of input ˜ signal)

(Lowest place ˜ No. of output˜ signal)

(Highest place˜ No. of output˜ signal)

Transition when˜ pressing ▲.

<Note>

- Shift the flashing decimal point with ◀SHIFT.

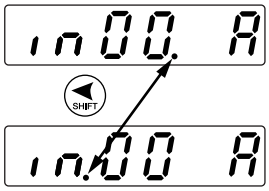

(Right side of decimal point : ˜˜ Signal selection mode)

(Left side of decimal point : ˜˜ Input/Output selection mode)

- The other way to change signal No. at I/O˜ selection mode˜Signal selection mode.˜ ˜

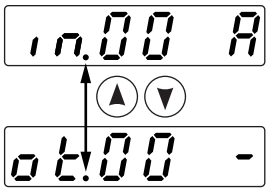

How to Use the Console

• Signal No. and its title

Input signal		
Signal No.	Title	Symbol
00	Servo-ON	SRV-ON
01	(For manufacturer's use)	
02	CW over-travel inhibit input	CWL
03	CCW over-travel inhibit input	CCWL
04	(For manufacturer's use)	
05	(For manufacturer's use)	
06	(For manufacturer's use)	
07	Multi-function input 1	EX-IN1
08	Multi-function input 2	EX-IN2
09	(For manufacturer's use)	
0A	(For manufacturer's use)	
0B	Home sensor input	Z-LS
0C	(For manufacturer's use)	
0D	(For manufacturer's use)	
0E	Emergency stop input	EMG-STP
0F	(For manufacturer's use)	
10	(For manufacturer's use)	
11	(For manufacturer's use)	
12	(For manufacturer's use)	
13	(For manufacturer's use)	
14	(For manufacturer's use)	
15	(For manufacturer's use)	
16	Point specifying input	P1IN
17	Point specifying input	P2IN
18	Point specifying input	P4IN
19	Point specifying input	P8IN
1A	Point specifying input	P16IN
1B	Point specifying input	P32IN
1C	Strobe signal input	STB-IN
1D	(For manufacturer's use)	
1E	(For manufacturer's use)	
1F	(For manufacturer's use)	

Output signal		
Signal No.	Title	Symbol
00	(For manufacturer's use)	
01	Servo alarm output	ALM
02	Positioning completion output/Output during deceleration	COIN/DCLON
03	Brake release output	BRK-OFF
04	(For manufacturer's use)	
05	(For manufacturer's use)	
06	(For manufacturer's use)	
07	Motor operation condition output	BUSY
08	(For manufacturer's use)	
09	(For manufacturer's use)	
0A	(For manufacturer's use)	
0B	(For manufacturer's use)	
0C	(For manufacturer's use)	
0D	(For manufacturer's use)	
0E	(For manufacturer's use)	
0F	(For manufacturer's use)	
10	Present position output	P1OUT
11	Present position output	P2OUT
12	Present position output	P4OUT
13	Present position output	P8OUT
14	Present position output	P16OUT
15	Present position output	P32OUT
16	(For manufacturer's use)	
17	(For manufacturer's use)	
18	(For manufacturer's use)	
19	(For manufacturer's use)	
1A	(For manufacturer's use)	
1B	(For manufacturer's use)	
1C	(For manufacturer's use)	
1D	(For manufacturer's use)	
1E	(For manufacturer's use)	
1F	(For manufacturer's use)	

*For details of Signal, refer to P.42 to 47.

• Point Number Conversion Table

The console shows the point numbers in the specified point input (No. 16 to 1B) and the current position output (No. 10 to 15) for the of I/O signal state. The point number is expressed in a six-digit binary number. Convert the point number from the I/O signal state referring to the table below.
The console shows [A] or [-] below when SV.Pr58 is “1”. If SV.Pr58 is “0”, interchange [A] and [-] with each other.

Input signal No.	1B	1A	19	18	17	16
Output signal No.	15	14	13	12	11	10
Point No.	P32	P16	P8	P4	P2	P1
0˜	–˜	–˜	–˜	–˜	–˜	–˜
1˜	–˜	–˜	–˜	–˜	–˜	A˜
2˜	–˜	–˜	–˜	–˜	A˜	–˜
3˜	–˜	–˜	–˜	–˜	A˜	A˜
4˜	–˜	–˜	–˜	A˜	–˜	–˜
5˜	–˜	–˜	–˜	A˜	–˜	A˜
6˜	–˜	–˜	–˜	A˜	A˜	–˜
7˜	–˜	–˜	–˜	A˜	A˜	A˜
8˜	–˜	–˜	A˜	–˜	–˜	–˜
9˜	–˜	–˜	A˜	–˜	–˜	A˜
10˜	–˜	–˜	A˜	–˜	A˜	–˜
11˜	–˜	–˜	A˜	–˜	A˜	A˜
12˜	–˜	–˜	A˜	A˜	–˜	–˜
13˜	–˜	–˜	A˜	A˜	–˜	A˜
14˜	–˜	–˜	A˜	A˜	A˜	–˜
15˜	–˜	–˜	A˜	A˜	A˜	A˜
16˜	–˜	A˜	–˜	–˜	–˜	–˜
17˜	–˜	A˜	–˜	–˜	–˜	A˜
18˜	–˜	A˜	–˜	–˜	A˜	–˜
19˜	–˜	A˜	–˜	–˜	A˜	A˜
20˜	–˜	A˜	–˜	A˜	–˜	–˜
21˜	–˜	A˜	–˜	A˜	–˜	A˜
22˜	–˜	A˜	–˜	A˜	A˜	–˜
23˜	–˜	A˜	–˜	A˜	A˜	A˜
24˜	–˜	A˜	A˜	–˜	–˜	–˜
25˜	–˜	A˜	A˜	–˜	–˜	A˜
26˜	–˜	A˜	A˜	–˜	A˜	–˜
27˜	–˜	A˜	A˜	–˜	A˜	A˜
28˜	–˜	A˜	A˜	A˜	–˜	–˜
29˜	–˜	A˜	A˜	A˜	–˜	A˜
30˜	–˜	A˜	A˜	A˜	A˜	–˜
31	–˜	A	A	A	A	A

Input signal No.	1B	1A	19	18	17	16
Output signal No.	15	14	13	12	11	10
Point No.	P32	P16	P8	P4	P2	P1
32˜	A˜	–˜	–˜	–˜	–˜	–˜
33˜	A˜	–˜	–˜	–˜	–˜	A˜
34˜	A˜	–˜	–˜	–˜	A˜	–˜
35˜	A˜	–˜	–˜	–˜	A˜	A˜
36˜	A˜	–˜	–˜	A˜	–˜	–˜
37˜	A˜	–˜	–˜	A˜	–˜	A˜
38˜	A˜	–˜	–˜	A˜	A˜	–˜
39˜	A˜	–˜	–˜	A˜	A˜	A˜
40˜	A˜	–˜	A˜	–˜	–˜	–˜
41˜	A˜	–˜	A˜	–˜	–˜	A˜
42˜	A˜	–˜	A˜	–˜	A˜	–˜
43˜	A˜	–˜	A˜	–˜	A˜	A˜
44˜	A˜	–˜	A˜	A˜	–˜	–˜
45˜	A˜	–˜	A˜	A˜	–˜	A˜
46˜	A˜	–˜	A˜	A˜	A˜	–˜
47˜	A˜	–˜	A˜	A˜	A˜	A˜
48˜	A˜	A˜	–˜	–˜	–˜	–˜
49˜	A˜	A˜	–˜	–˜	–˜	A˜
50˜	A˜	A˜	–˜	–˜	A˜	–˜
51˜	A˜	A˜	–˜	–˜	A˜	A˜
52˜	A˜	A˜	–˜	A˜	–˜	–˜
53˜	A˜	A˜	–˜	A˜	–˜	A˜
54˜	A˜	A˜	–˜	A˜	A˜	–˜
55˜	A˜	A˜	–˜	A˜	A˜	A˜
56˜	A˜	A˜	A˜	–˜	–˜	–˜
57˜	A˜	A˜	A˜	–˜	–˜	A˜
58˜	A˜	A˜	A˜	–˜	A˜	–˜
59˜	A˜	A˜	A˜	–˜	A˜	A˜
60˜	A˜	A˜	A˜	A˜	–˜	–˜
61˜	A˜	A˜	A˜	A˜	–˜	A˜
62˜	A˜	A˜	A˜	A˜	A˜	–˜
63	A	A	A	A	A	A

<Notice>

- [-] shows the OPEN state and [A] shows the CLOSED state.
- The number of point inputs can be specified in SV.Pr57.
- The logic of point input can be changed in SV.Pr58.
  The table above shows the case of “1: Point input is enabled by closing the connection to COM–”.
  [A] and [-] are interchanged with each other in the case of “0: Point input is enabled by opening the connection to COM–”.
- A point of “High-speed jog operation (negative direction)”, “High-speed jog operation (positive direction)” and “Homing command” depends on the settings of SV.Pr57.

Reference of Error Factor and History

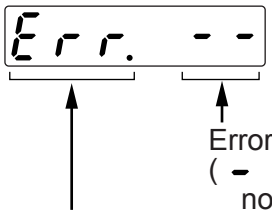

Err. .....Present error

E-0. .....History 0 (latest error)

E 13. .....History 13 (oldest error)

- You can refer the last 14 error factors (including present one).
  Press ▲ ▼ to select the factor to be referred.

<Note>

- Following errors are not included in the history.
  - 11: Control power supply under-voltage protection
  - 13: Main power supply under-voltage protection
  - 36: EEPROM parameter error protection
  - 37: EEPROM check code error protection
  - 39: Emergency stop input error protection
  - 93: External scale auto recognition error protection
  - 95: Motor auto recognition error protection
- When one of the errors which are listed in error history occurs, this error and history o shows the same error No.
- When error occurs, the display flashes.

<Notice>

For the relation between an error code number and an error, refer to “Protective Function” in [When in Trouble] on page 164.

Alarm Display

- ·····no alarm A ·····Alarm occurrence

- **Over-load alarm** : ˜
  Turns on when the load reaches 85% or more of alarm trigger level of over-load protection.˜
- **Over-regeneration alarm** : ˜
  Turns on when regenerative load reaches more than 85% of alarm trigger level of regenerative load protection. Alarm trigger level is defined as 10% of regenerative resister working ratio, when Pr6C "Selection of external regenerative resister " is 1.˜
- **Battery alarm**
- **Fun-lock alarm**

How to Use the Console

Display of Regenerative Load Factor

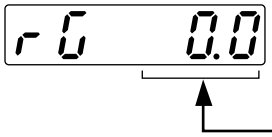

Shows regenerative resistance load factor in percentage assuming that an operation level of regenerative protection is 100%.˜
This is valid when SV.Pr6C is 0 or 1.

Display of Over-load Factor

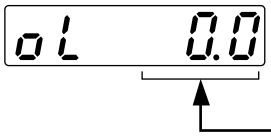

Displays the ratio (%) against the rated load. ˜˜
Refer to P.170, "Overload Protection Time Characteristics" of When in Trouble.

Display of Inertia Ratio

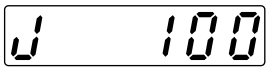

Displays the inertia ratio (%) .˜˜
Value of SV.Pr20 (Inertia ratio) will be displayed as it is.

Display of Feedback Pulse Sum, Command Pulse Sum

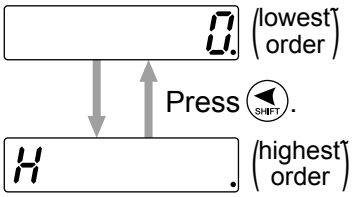

Total sum of pulses after control power-ON. ˜
The display range is from –2147483647 to 2147483647.˜
An overflow occurs if the result is outside the display range.˜
Sum of pulses shown can be reset to " 0" by pressing S SET for approximately 5 seconds or more.

Display of External Scale Deviation, External Scale Feedback Pulse Sum

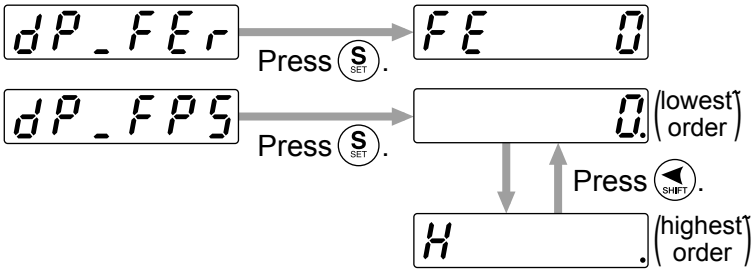

* Not available to the models that do not support external scale.

Automatic Motor Recognizing Function

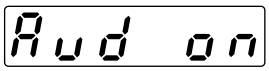

Automatic recognition is valid. (This is always shown.)

Switching of the Driver to be Communicated

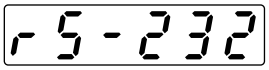

RS232 communication

....."1" is always shown.

Teaching Mode

Overview of Teaching Mode

In the teaching mode, you can operate the motor actually using this console, set a target position and execute a test operation, e.g., step operation, jog operation, etc.

Operation at SELECTION display

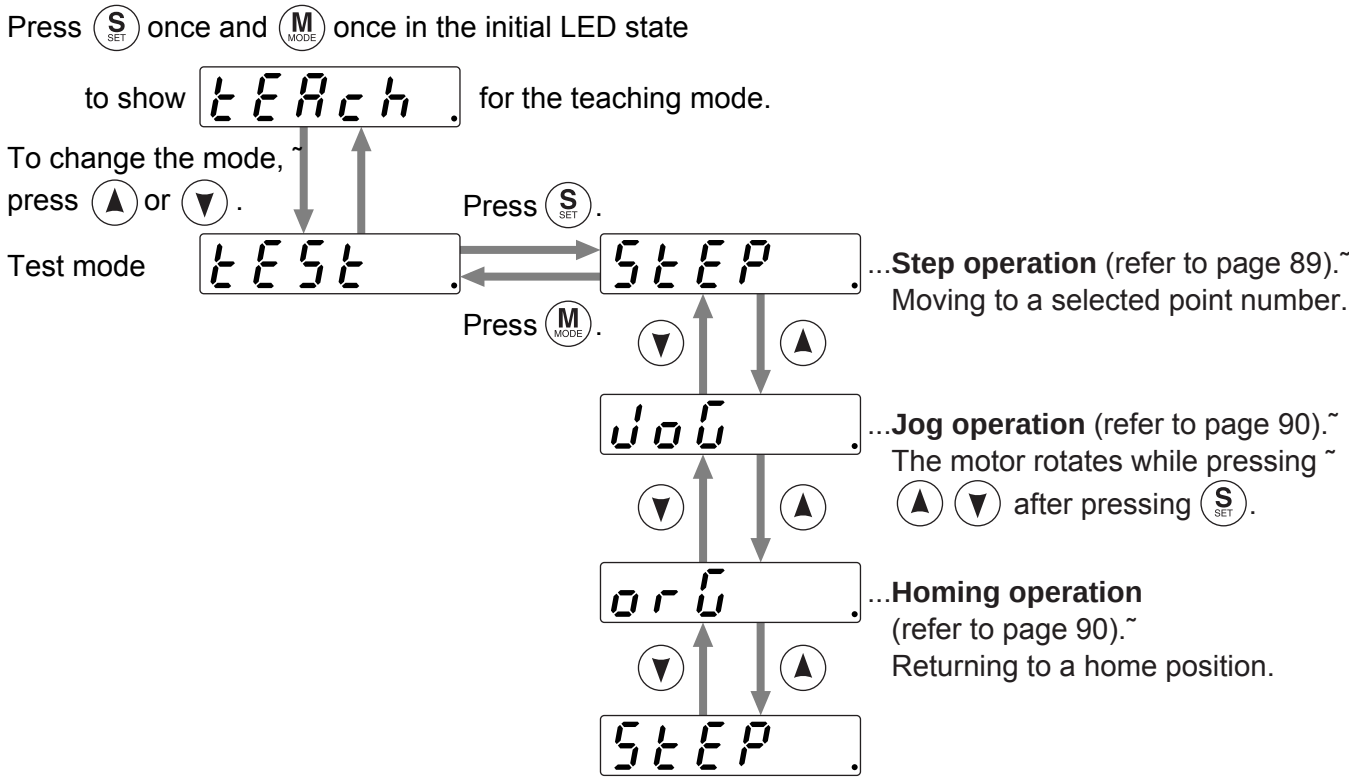

<Note>

- **When operating the motor, check the safety, e.g., whether the wiring is correct, whether the servo motor is fixed, etc.**
- **When a trouble, e.g., cable breakage, has occurred during a motor operation, the servo driver overruns a maximum of approximately 1s. Check the safety fully.**

Teaching Mode Setup

Operate the motor and set a target position.

Operation at EXECUTION display

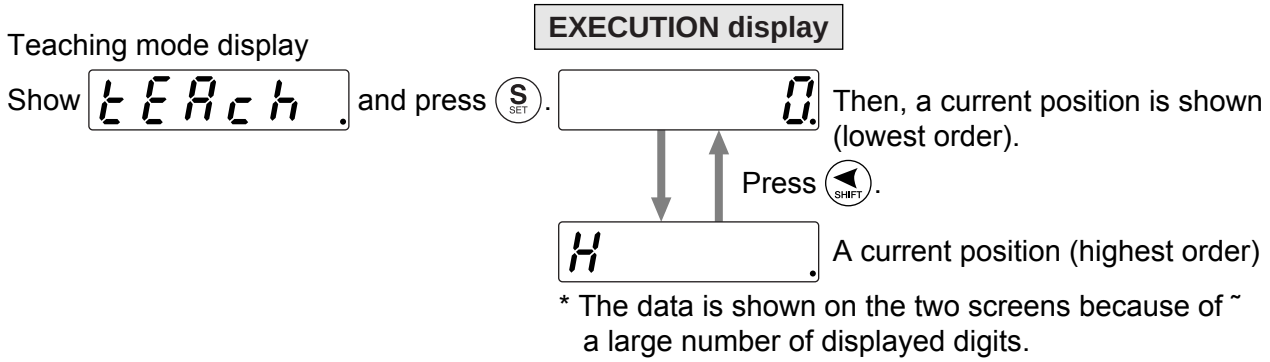

* If "Error" is shown, it may be caused by any of the factors below.
  - Homing is not completed.
  - The servo turns off.
  - Operation by I/O etc.
  - 16.Pr51 (wrap around permission) is set to "1".

When you press (▲), the motor rotates by specified travel in a positive direction.
When you press (▼), the motor rotates by specified travel in a negative direction.˜
˜The travel can be set by 16.Pr48 (teaching travel setting).˜
The rotation speed can be set by16.Pr40 (jog speed [low]).˜
When you press (M MODE) during movement, the motor decelerates and stops.

When you keep on pressing (▲), the motor rotates continuously in a positive direction while pressing it.
When you keep on pressing (▼), the motor rotates continuously in a negative direction while pressing it.
The rotation speed can be set by16.Pr40 (jog speed [low]).˜
When you press (M MODE) during rotation, the rotation speed changes to a jog speed (high speed).

When you keep on pressing (▲) + (M MODE), the motor rotates continuously in a positive direction while pressing it.
When you keep on pressing (▼) + (M MODE), the motor rotates continuously in a negative direction while pressing it.
The rotation speed can be set by16.Pr41 (jog speed [high]).˜
When you press (M MODE) during rotation, the rotation speed changes to a jog speed (low speed).

Definition of positive or negative direction of rotation depends on the setting of 16.Pr50 (operating direction setting).˜
“Error” is shown when execution is made during an operation by I/O etc.˜
When you press (S SET), teaching is completed and you will be moved to the parameter number selection.˜
If you do not want to store a current position in a parameter, press (M MODE) after finishing teaching.

Press (S SET).

- **Parameter number selection**
  To store a current position, set ˜ a relevant point number using ˜ (◀ SHIFT), (▲) and/or (▼).

5000 .....Current position (low order)

03. .....Point number

Keep on pressing (S SET).

- **Target position setting**
  Select a point number and keep ˜ on pressing (S SET). A current ˜ position is set in a selected ˜ parameter and you will be moved ˜ to the speed number selection.

5000. ← A dot moves to the left.

03 .....Point number

- **Step parameter setting**
  For the setting of the speed number ˜ selection – block selection, ˜ refer to “Step Parameters” on ˜ page 92.

UEL 1. .....Speed number selection

⋮

SinGLE. .....Block selection

Press (S SET).

tEAch .

* When you press (M MODE) during parameter setting, any parameter in process is not changed and is˜ tEAch shown again.˜
* When you set a target position by teaching, an operation mode fixed to the absolute value mode.˜
* If you set a target position manually when the servo turns off or main power supply turns off, set SV.Pr67 and SV.Pr69 to “Deviation counter clear”.˜
* When you have set the parameters, write the parameters into EEPROM. If you turn the power supply off before writing the parameters into EEPROM, those parameters are cleared.

Test Mode

• Step operation

An operation is performed at a position of a selected point number.

* Execute homing completely before performing a step operation.

An example of an operation to move to the point No. 2 is shown below.

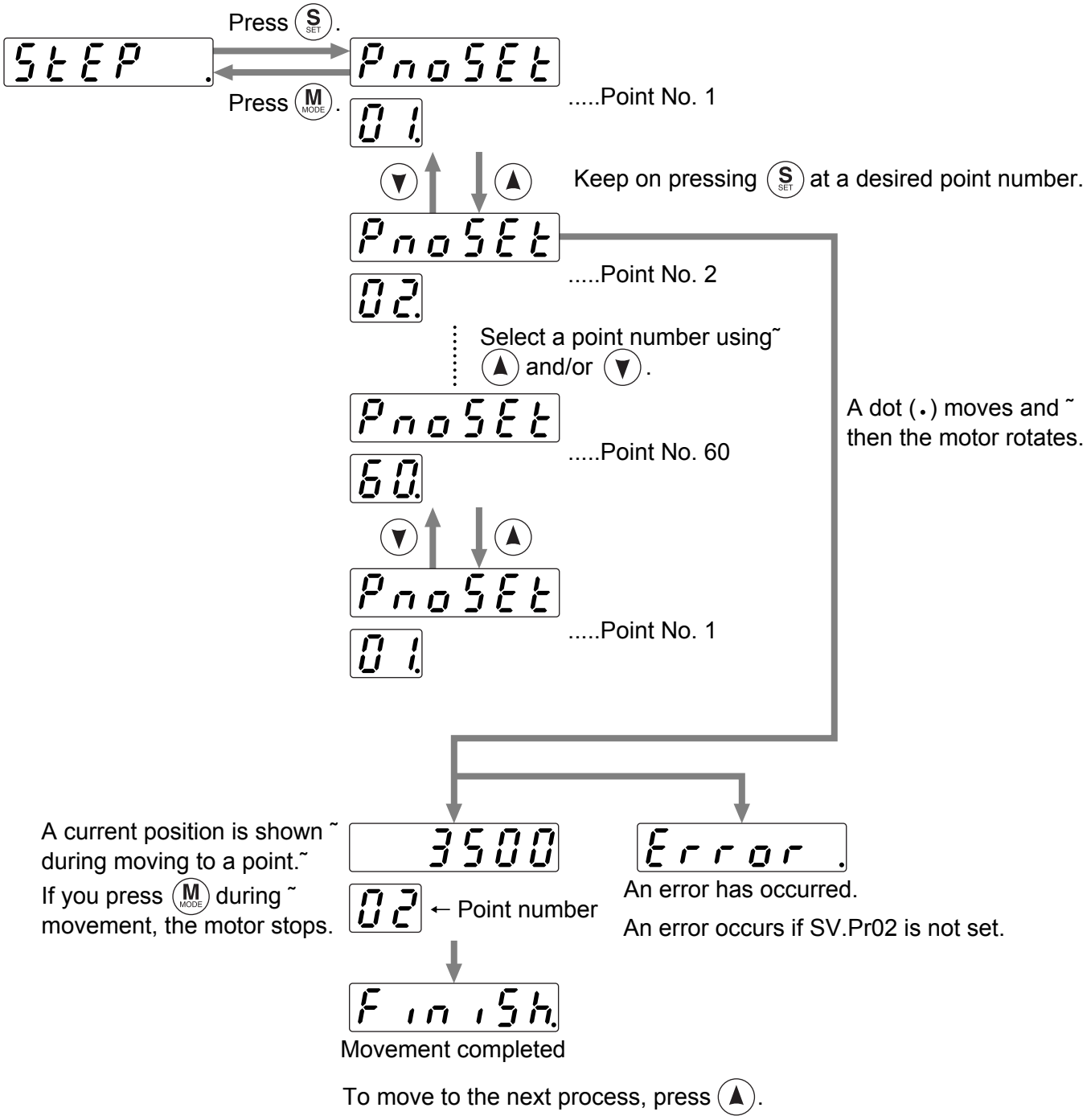

How to Use the Console

• Jog operation

The motor can be operated by the jog operation.

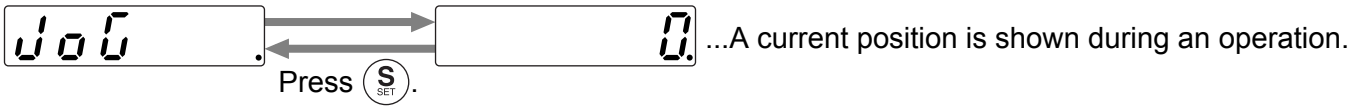

When you keep on pressing ▲, the motor rotates continuously in a positive direction while pressing it.
When you keep on pressing ▼, the motor rotates continuously in a negative direction while pressing it.
The rotation speed can be set by 16.Pr40 (jog speed [low]).˜
When you press M during rotation, the rotation speed changes to a jog speed (low).

When you keep on pressing ▲ + M, the motor rotates continuously in a positive direction while pressing it.
When you keep on pressing ▼ + M, the motor rotates continuously in a negative direction while pressing it.
The rotation speed can be set by 16.Pr41 (jog speed [high]).˜
When you press M during rotation, the rotation speed changes to a jog speed (high).

* Definition of positive or negative direction of rotation depends on the setting of 16.Pr50 ˜ (operating direction setting).˜
* If “Error” is shown, it may be caused by any of the factors below.˜
- The servo turns off.˜
- Operation by I/O etc.

• Homing

Homing is performed as follows.

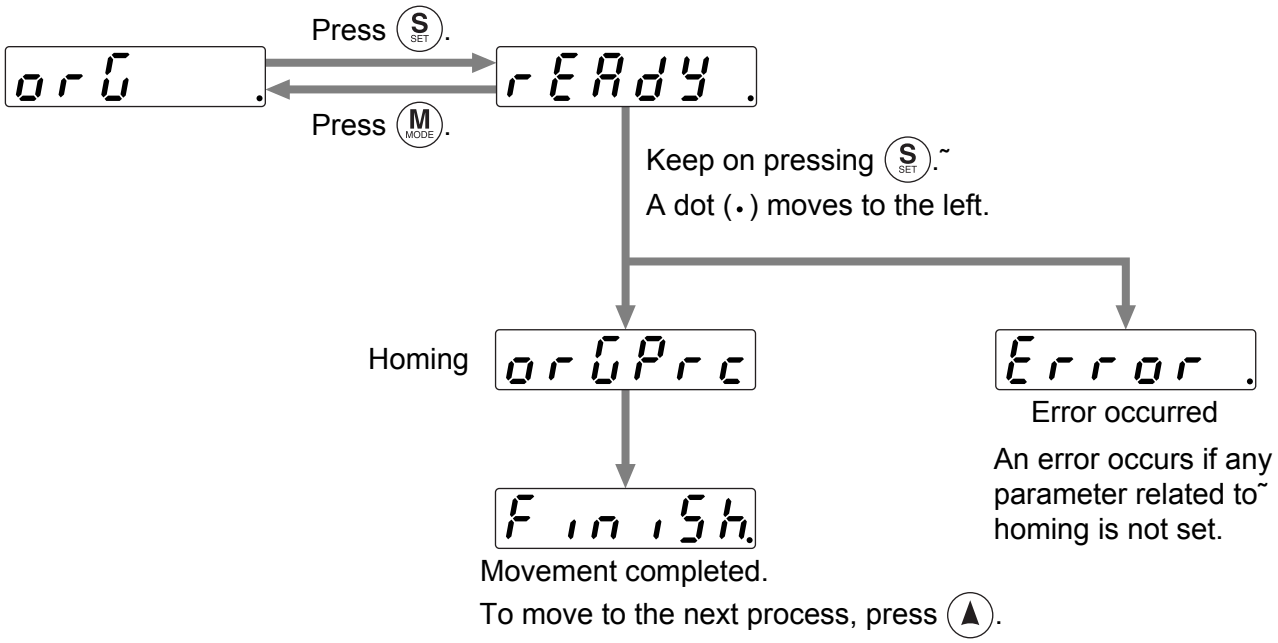

Parameter setup mode

Set the servo driver parameters.
The parameters are classified as follows:

- Step parameter (ST.Pr)
- 16-bit positioning parameter (16.Pr)
- 32-bit positioning parameter (32.Pr)
- Servo parameter (SV.Pr)

Structure of Parameter Setup Mode

When you press (S SET) once and (M MODE) twice in the initial LED state, ˜
the step parameter display shows [StEP P].˜
Select a target parameter using (▼) and/or (▲).

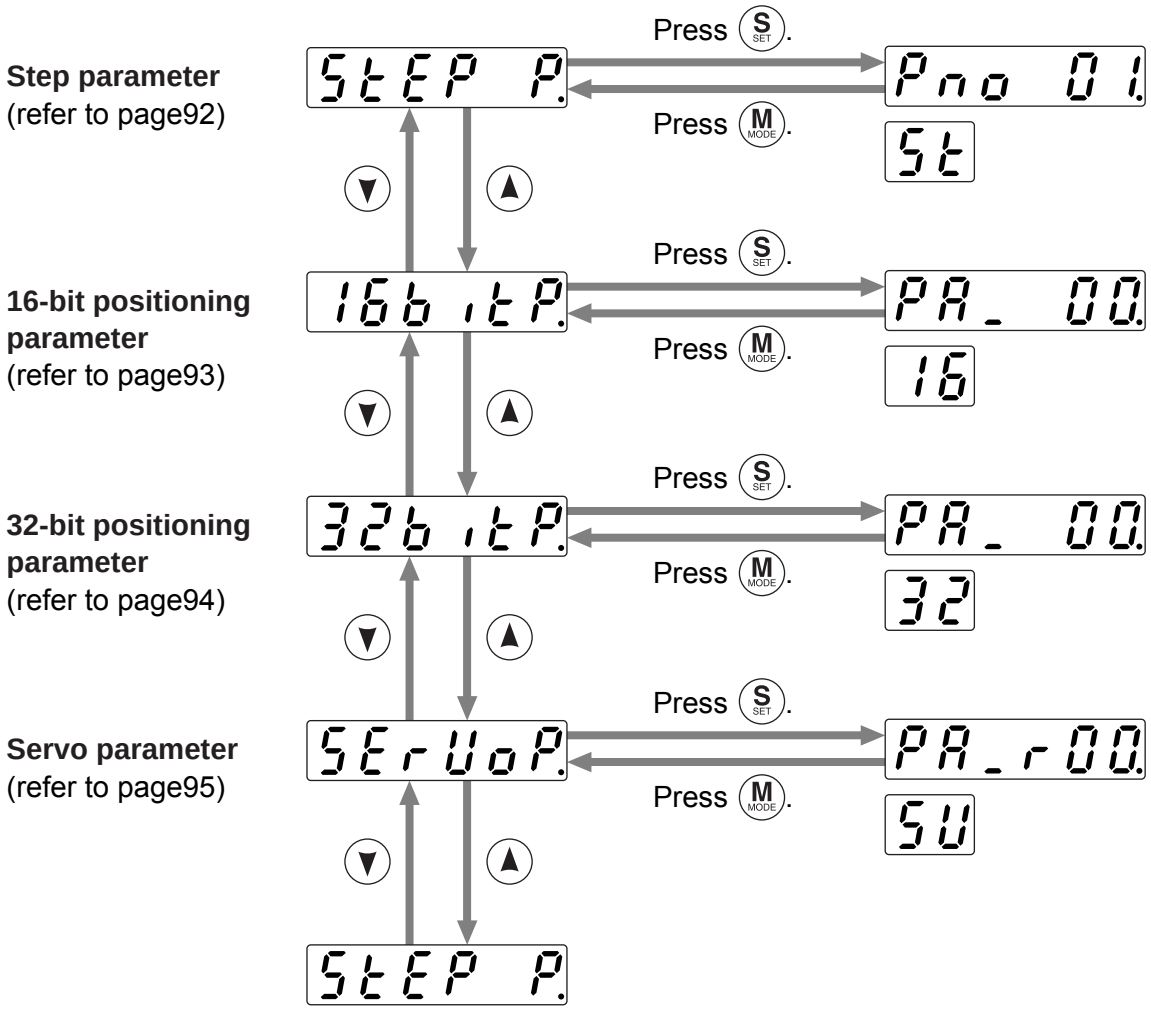

How to Use the Console

Step Parameter

Step parameter can be set.
* An example to set in ST.Pr1 is shown below.

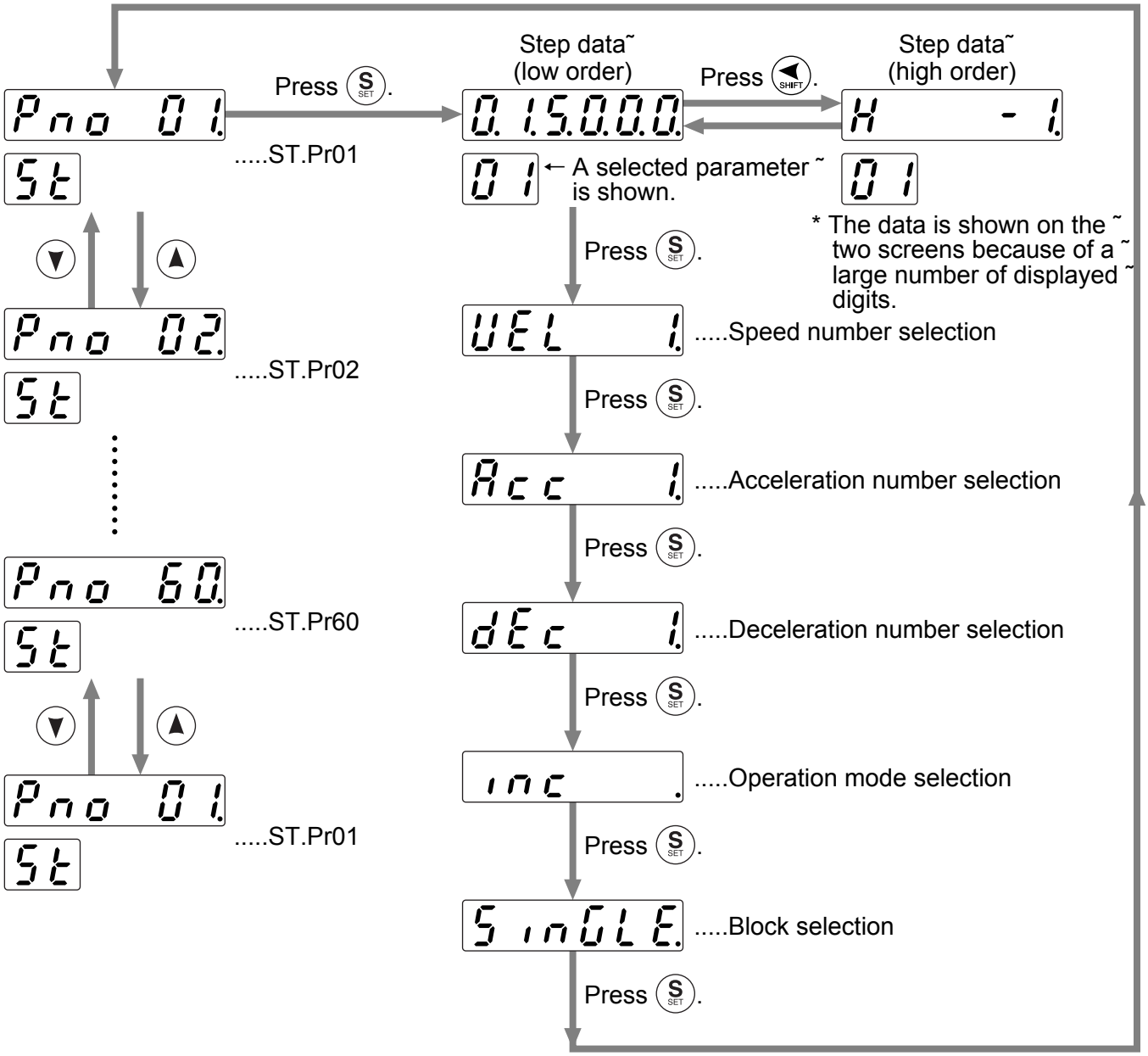

<Notice>
Select an input digit (a dot blinks) by the [SHIFT] key and a parameter by the [UP]/[DOWN] key.˜
The step data is shown on the two screens because of a large number of displayed digits.˜
If the parameter is a negative value, a dot lights. ˜
When you press the [SET] key, the parameter is modified.˜
˜

* When you press M during parameter setting, any parameter in process is not changed and “No.” display is shown again.˜
* When you have set the parameters, write the parameters into EEPROM. If you turn the power supply off before writing the parameters into EEPROM, those parameters are cleared.

16-Bit Positioning Parameter

16-bit positioning parameter can be set.

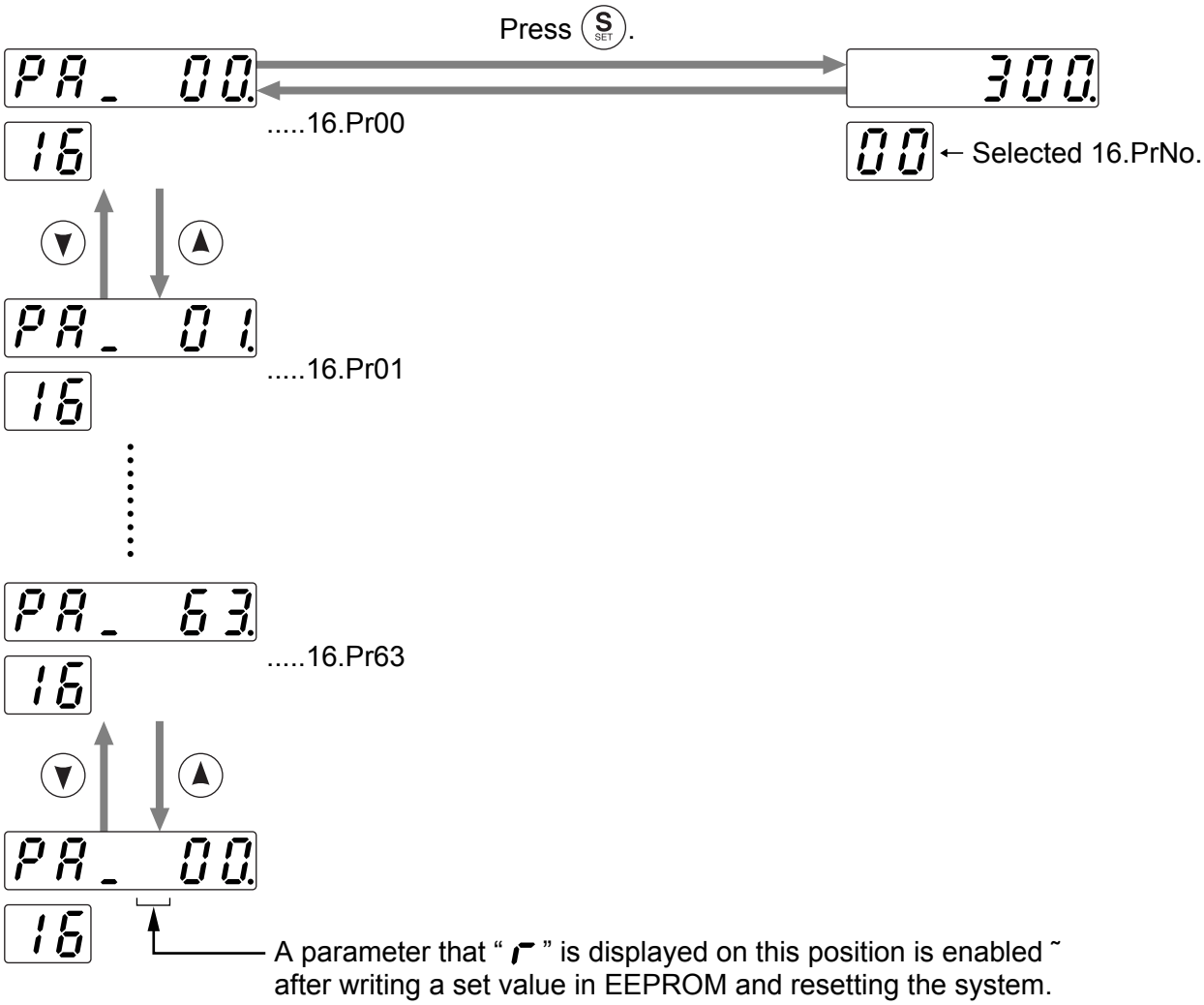

<Notice>˜
Select an input digit (a dot blinks) by the [SHIFT] key and a parameter by the [UP]/[DOWN] key.˜
When you press the [SET] key, the parameter is modified.˜
˜

* When you press (M MODE) during parameter setting, any parameter in process is not changed and "No." display is shown again.˜
* When you have set the parameters, write the parameters into EEPROM. If you turn the power supply off before writing the parameters into EEPROM, those parameters are cleared.

32-Bit Positioning Parameter

32-bit positioning parameter can be set.

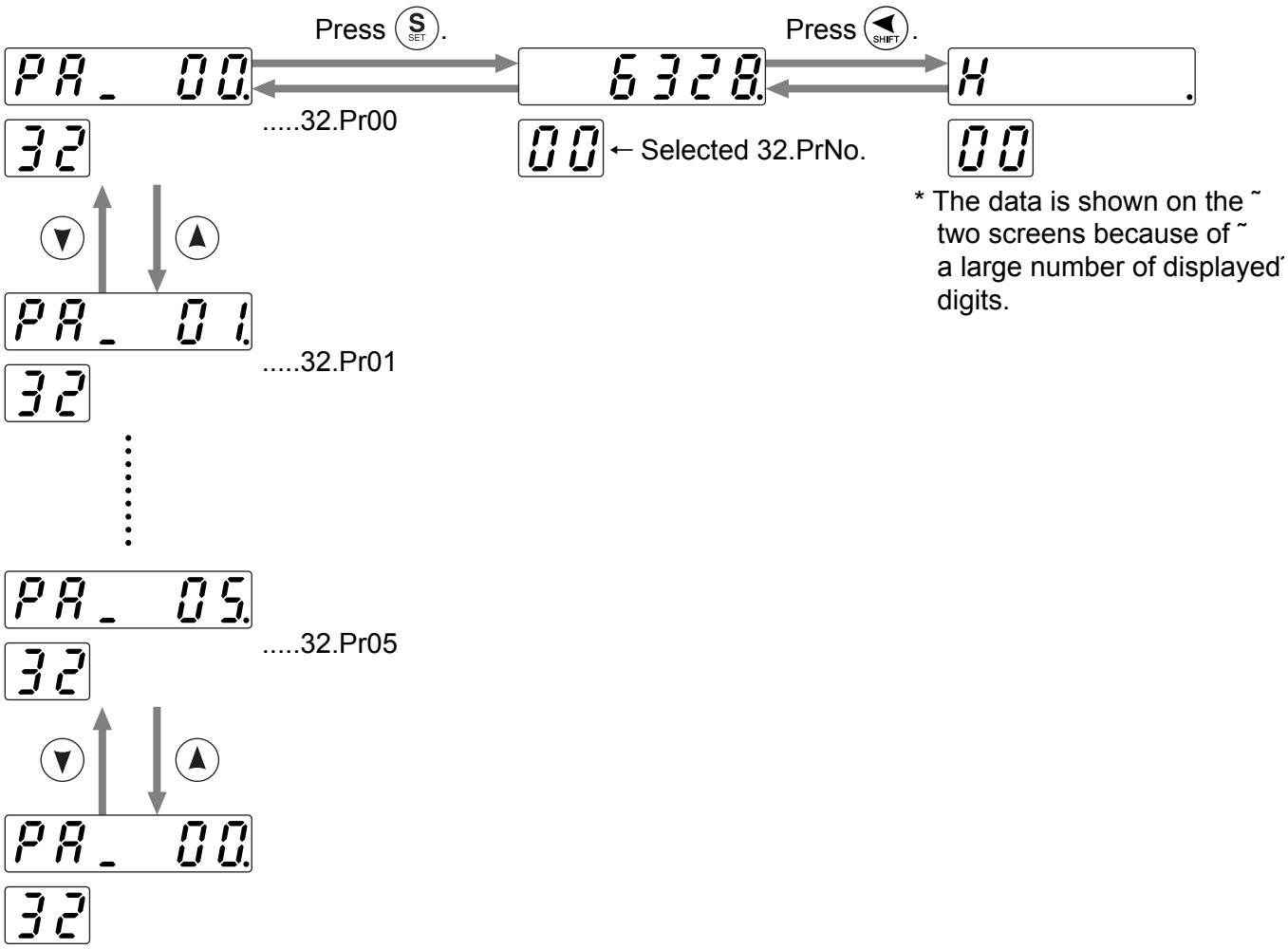

<Notice>

Select an input digit (a dot blinks) by the [SHIFT] key and a parameter by the [UP]/[DOWN] key.

The 32-bit positioning parameter is shown on the two screens because of a large number of displayed digits.

If the parameter is a negative value, a dot lights.

When you press the [SET] key, the parameter is modified.

* When you press M MODE during parameter setting, any parameter in process is not changed and “No.” display is shown again.
* When you have set the parameters, write the parameters into EEPROM. If you turn the power supply off before writing the parameters into EEPROM, those parameters are cleared.

Servo Parameter

Servo parameter can be set. For the details of parameter, refer to “Parameter Setup” on page 56.

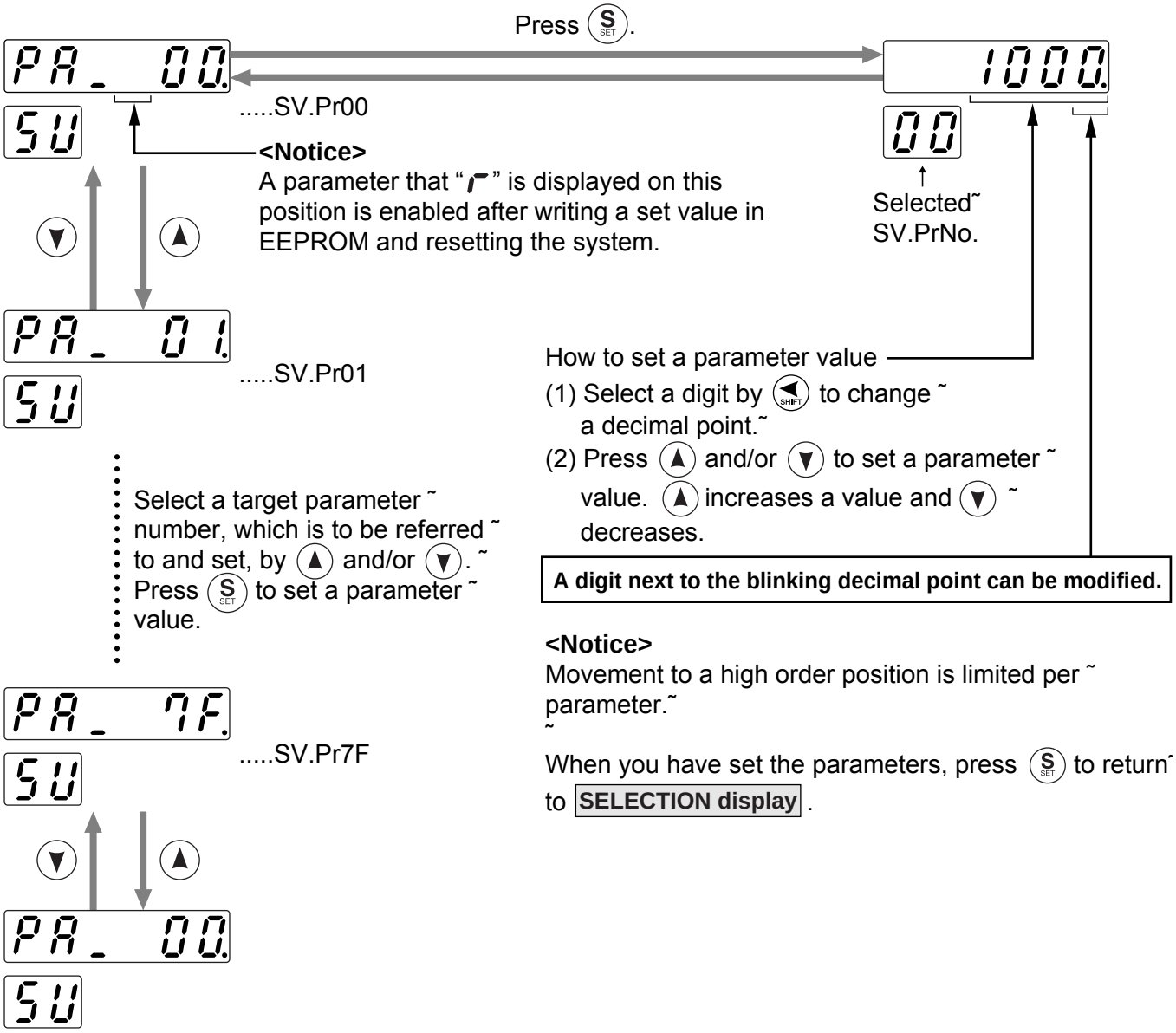

<Notice>
A parameter that “r” is displayed on this position is enabled after writing a set value in EEPROM and resetting the system.

Select a target parameter ˜ number, which is to be referred ˜ to and set, by ▲ and/or ▼. ˜ Press S to set a parameter ˜ value.

How to set a parameter value

(1) Select a digit by ◀ to change ˜ a decimal point.˜

(2) Press ▲ and/or ▼ to set a parameter ˜ value. ▲ increases a value and ▼ ˜ decreases.

A digit next to the blinking decimal point can be modified.

<Notice>
Movement to a high order position is limited per ˜ parameter.˜
˜

When you have set the parameters, press S to return˜ to **SELECTION display** .

<Remarks>
When you change a parameter value and press S, the change is reflected in the control. Modify gradually a value of parameter (especially, velocity loop gain, position loop gain, etc.) which exerts an influence on the motor operation, not changing it extremely at a time.˜
˜

* When you have set the parameters, write the parameters into EEPROM. If you turn the power supply off before writing the parameters into EEPROM, those parameters are cleared.

EEPROM Write Mode

EEPROM Writing

Operation at SELECTION display

Starting from the initial LED status, ˜
press (M MODE) three time after pressing (S SET),˜
then brings the display of ˜
EEPROM Writing Mode, EE_SEt.

Operation at EXECUTION display

Press (S SET) to make ˜
EXECUTION DISPLAY to˜ EEP -.
˜
Keep pressing˜(▲)
until the display changes to StArt when you execute writing.

" - " increases while ˜
keep pressing (▲) ˜
(for approx. 5sec) as ˜
the right fig. shows.

EEP -.
EEP --.
------.

Starts writing. StArt

Finishes writing

FinISh. rESEt. Error.

Writing completes — Writing error

To move to the next process, press (▲).

• When you change the parameters which contents become valid after resetting, rESEt. will be ˜
displayed after finishing wiring. Turn off the control power once to reset.˜
˜

Note 1)˜When writing error occurs, make writing again. If the writing error repeats many times, ˜
˜ this might be a failure.˜
Note 2)˜Don't turn off the power during EEPROM writing. Incorrect data might be written. ˜
˜ If this happens, set up all of parameters again, and re-write after checking the data.˜
Note 3)˜Between StArt and FinISh, take care not to pull out a console connector from a servo˜
˜ driver main unit. If the connector is pulled out accidentally, insert the connector again and retry˜
˜ from the beginning.˜

<Notice>
When you have set the parameters, write the parameters into EEPROM. If you turn the power supply off before writing the parameters into EEPROM, those parameters are cleared.

Auto-Gain Tuning Mode

Normal Mode Auto-Gain Tuning Screen

<Remarks>

- For details of normal auto-gain tuning, refer to P.148, "Normal Auto-Gain Tuning" of Adjustment. Pay a special attention to applicable range and cautions.
- The motor will be driven in a preset pattern by the driver in normal auto-gain tuning mode. You can change this pattern with SV.Pr25 (Normal auto tuning motion setup), however, shift the load to where the operation in this pattern may not cause any trouble, then execute this tuning.
- Depending on the load, oscillation may occur after the tuning. In order to secure the safety, use the protective functions of SV.Pr26 (Software limit set up), SV.Pr70 (Position deviation error level) or SV.Pr73 (Overspeed level).

Operation at SELECTION display

Starting from the initial LED status, press (M MODE) four time after pressing (S SET), then brings the display of normal auto-gain tuning, then press (▲) (▼) to select the machine stiffness No.

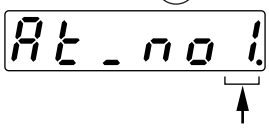

machine stiffness No.
(1 to 9, A (10) to F (15))

<Note>
For machine stiffness No., refer to P.148.

Operation at EXECUTION display

Press (S SET) to make EXECUTION DISPLAY to

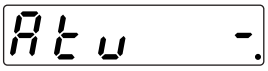

After inhibiting command input, and during Servo-On status,keep pressing (▲) until Console (LED) display changes to StArt .

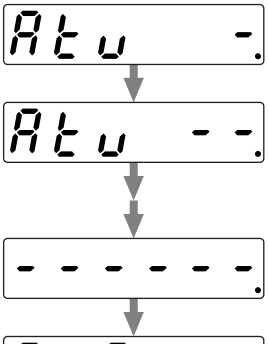

" - " increases by pressing (▲) (approx. 5sec) as the left fig. shows.

Starting of the motor

Tuning finishes.

Tuning completes Tuning error

<Note>
To prevent the loss of gain value due to the power shutdown, write into EEPROM.

When you have finished the tuning, press (S SET) to return to **SELECTION display**.

<Remarks>

Don' t disconnect the console from the driver between StArt **and** Finish. **.**
Should the connector is pulled out, insert it again and repeat the procedures from the beginning.

<Note> If the following status occurs during the tuning action, the tuning error occurs.

(1) During the tuning action, 1) when an error occurs, 2) when turned to Servo-OFF, 3) even the deviation counter is cleared and 4) when the tuning is actuated close to the limit switch.
(2) When the output torque is saturated because the inertia or load is too large.
(3) When the tuning can not be executed well causing oscillation.

If the tuning error occurs, value of each gain returns to the previous value before the tuning. The driver does not trip except error occurrence. Depending on the load, the driver might oscillate without becoming tuning error. (not showing Error . **) Extra attention should be paid to secure the safety.**

How to Use the Console

Auxiliary Function Mode

The console has two auxiliary functions.

(1) Alarm Clear
A protection function works and a motor stop (motor trip) can be canceled.

(2) Absolute encoder clear
A value of absolute encoder is cleared.

Structure of Auxiliary Function Mode

Operation at SELECTION display

Starting from the initial LED status, Press (M MODE) five time after pressing (S SET), then brings the display of Auxiliary Function Mode,

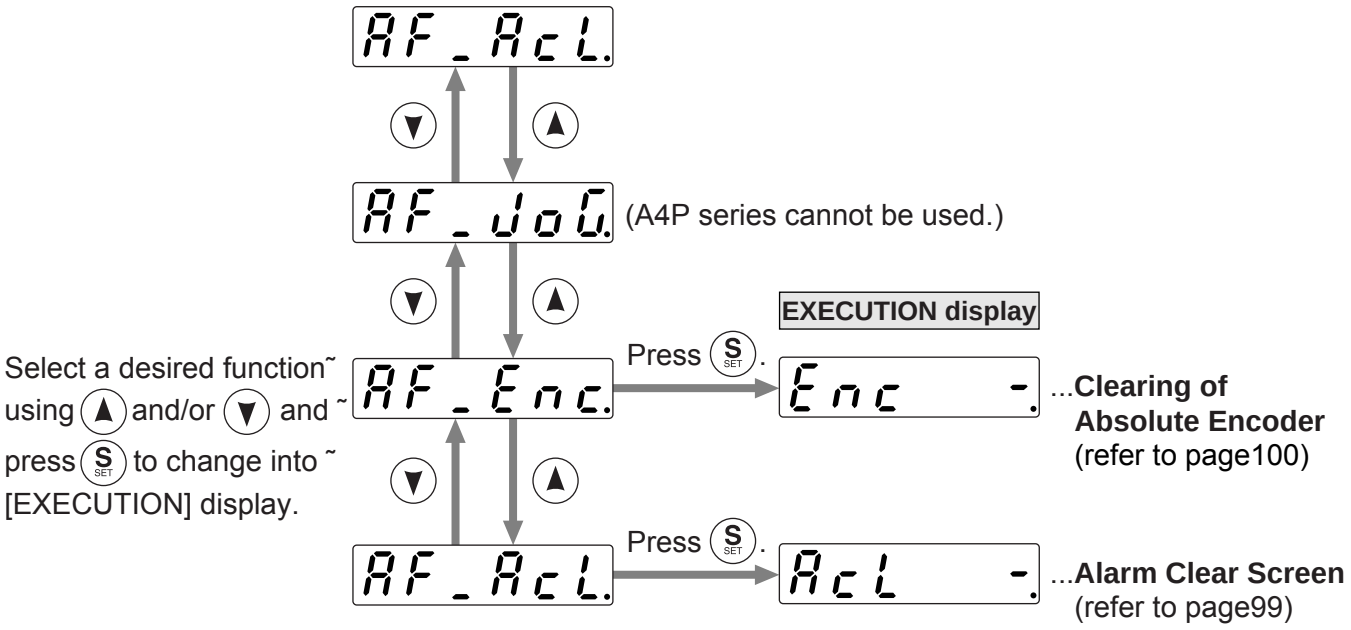

Alarm Clear Screen

Protective function will be activated and release the motor stall status (error status).

Operation at SELECTION display

Starting from the initial LED status,
Press (M MODE) five time after pressing (S SET),
then press (▲) (▼) to make a display to AF_AcL.

Operation at EXECUTION display

Press (S SET) to call for EXECUTION display of AcL -.

Keep pressing (▲) until the console (LED) changes to StArt

AcL -.

AcL - -.

- - - - - - -.

StArt

Alarm clear starts.

Clearing finishes.

FinISh.

Alarm clear completes

Error .

Clear is not finished.
Release the error by resetting the power.

" - " increases by pressing (▲) (approx. 5sec) as the right fig. shows.

When you have set the alarm clear, press (S SET) to return to **SELECTION display**.

<Remarks>
Don't disconnect the console from the driver between StArt and FinISh.
Should the connector is pulled out, insert it again and repeat the procedures from the beginning.

How to Use the Console

Clearing of Absolute Encoder

Only applicable to the system which uses absolute encoder. You can clear the alarm and multi-turn data of the absolute encoder.

Operation at SELECTION display

Press (M MODE) five time after pressing (S SET), to setup auxiliary function mode, then with (▲) (▼) , make a display to AF_Enc

Operation at EXECUTION display

Press (S SET) to call for EXECUTION DISPLAY of Enc -.

Then keep pressing (▲) until the display of Console (LED) changes to StArt

Enc -.

Enc --.

" - " increases by pressing (▲) (approx. 5sec) as the left fig. shows.

Clearing of absolute encoder starts StArt

Clearing finishes

Finish.

Clearing of absolute encoder completes

Error .

Error occurs (When non-applicable encoder is connected)

A incremental encoder or any unsupported encoder other than an absolute encoder may be connected. Reset the power supply and clear the error.

When you have cleared the absolute encoder, press (S SET) to return to **SELECTION display** .

<Remarks>

Don' t disconnect the console from the driver between StArt to Finish .

Should the connector is pulled out, insert it again and repeat the procedures from the beginning.

<Notice>

If an error code No. 40 is shown on the console immediately after purchase, clear the absolute encoder through the console.

Copying Function (Console Only)

Copying of Parameters from the Driver to the Console

Operation at SELECTION display

Starting from initial LED status, Press (M MODE) six time after pressing (S SET), then press (▲) (▼), ˜ to make a display to

cF_A2c.

Operation at EXECUTION display

Press (S SET) to call for ˜ EXECUTION DISPLAY of

A2c -.

Keep pressing (▲) until ˜ the console display (LED)˜ changes to EEPclr.

A2c --.

" - " increases by ˜ pressing (▲) (approx. 3sec) ˜ as the left fig. shows.

------.

Initialization of EEPROM ˜ of the console starts.

EEPclr

--

The positioning parameter is copied from the servo driver into the console and the positioning parameter is written into EEPROM (console).

PoS_P

cP

The servo parameter and driver type code are copied from the servo driver into the console and the driver type code of the servo parameter is written into EEPROM (console).

SrU_P

cP

Finish.

Copying completes normally.

Error.

Error display

<Remarks>

If error is displayed, repeat ˜ the procedures from the ˜ beginning.˜

Press (S SET) for releasing error.

To move to the next process, press (▲).

When you have finished the copy, press (S SET) to return to **SELECTION display**.

<Remarks>

Don' t disconnect the console from the driver between EEPclr **to** SrU_P **.**

Should the connector is pulled out, insert it again and repeat the procedures from the beginning.˜

<Note>

If the error display repeats frequently, check the broken cable, disconnection of the connector, misoperation due to noise or failure of console.

How to Use the Console

Copying of Parameters from the Console to the Driver

Operation at SELECTION display

Starting from initial LED status,Press (M MODE) six time after pressing (S SET), then press˜(▲) (▼) to make a display to

cF_c2A.

Operation at EXECUTION display

Press (S SET) to call for ˜ EXECUTION DISPLAY of

c2A -.

Keep pressing (▲) until ˜ the console display (LED) ˜ change.

c2A --.

" - " increases by ˜ pressing (▲) (approx. 3sec) ˜ as the left fig. shows.

- - - - - -.

If a type code stored in EEPROM (console) and another type code of servo driver are different from each other.

diFFEr

Press (M MODE).

When you keep on pressing (◀ SHIFT), ˜ a dot (.) moves to the left.

Check whether or not to transfer the read parameter to the servo driver.

EEP_ch

- -

The positioning parameter is copied from the console into the servo driver.

PoS_P

cP

The servo parameter is copied from the console into the servo driver and the driver type code of the servo parameter is written into EEPROM (console).

SrU_P

cP

FinISh.

Error.

Error display

<Remarks>

If error is displayed, ˜ repeat the procedures˜ from the beginning.˜ ˜

Copying completes normally.

To move to the next process, press (▲).

When you have finished the copy, press (S SET) to return to **SELECTION display**.

<Remarks>

Don' t disconnect the console from the driver between EEP_ch **to** SrU_P **.**

Should the connector is pulled out, insert it again and repeat the procedures from the beginning.˜

<Note>

If the error display repeats frequently, check the broken cable, disconnection of the connector, misoperation due to noise or failure of console.

Outline of PANATERM®

With the PANATERM®, you can execute the followings.
(1) Setup and storage of parameters, and writing to the memory (EEPROM).
(2) Monitoring of I/O and pulse input and load factor.
(3) Display of the present alarm and reference of the error history.
(4) Data measurement of the wave-form graphic and bringing of the stored data.
(5) Normal auto-gain tuning
(6) Frequency characteristic measurement of the machine system.

How to Connect

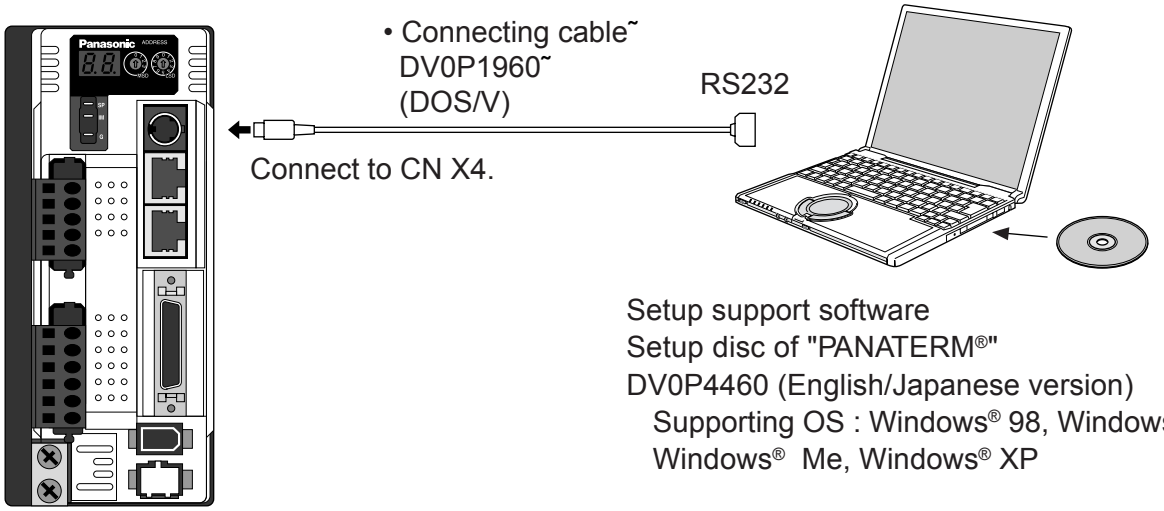

Setup support software
Setup disc of "PANATERM®"
DV0P4460 (English/Japanese version)
Supporting OS : Windows® 98, Windows® 2000, Windows® Me, Windows® XP

Install the "PANATERM®" to Hard Disc

<Cautions/Notes>

1. 15MB capacity of hard disc is required. OS to be Window® 98, Windows® 2000, Windows® Me or Windows® XP.
2. Install the "PANATERM®" to a hard disc, using the setup disc according to the procedures below to log on.

Procedure of install

1) Turn on the power of the computer to log on the supporting OS. (Exit the existing logged on software.)
2) Insert the setup disc of the "PANATERM®" to CD-ROM drive.
3) When a window has opened automatically, click a name of file required.
   * If a window has not opened automatically, execute the target setup file through the Explorer.
4) Operate according to the guidance of the setup program file.
5) Click [OK] on the installation verification window to start the setup.
6) Exit all applications and log on Windows® again.
   "PANATERM®" will be added on program menu when you log on again.

Outline of Setup Support Software, "PANATERM®"

Log on of the "PANATERM®" .

<Cautions/Notes>

1. Once the "PANATERM®" is installed in the hard disc, you do not need to install every time you log on.
2. Connect the driver to a power supply, the motor and encoder before you log on.
   Refer to the instruction manual of supporting OS for start.

Procedure of log on

1) Turn on the power of the computer and log on the supporting OS.
2) Turn on the power of the driver.
3) Click the start bottom of the supporting OS.
   (Refer to the instruction manual of supporting OS for start.)
4) Select the "PANATERM®" with program ▶ and click.
5) The screen turns to "PANATERM®" after showing opening splash for approx. 2sec.

For more detailed information for operation and functions of the "PANATERM®", refer to the instruction manual of the Setup Support Software, "PANATERM®".

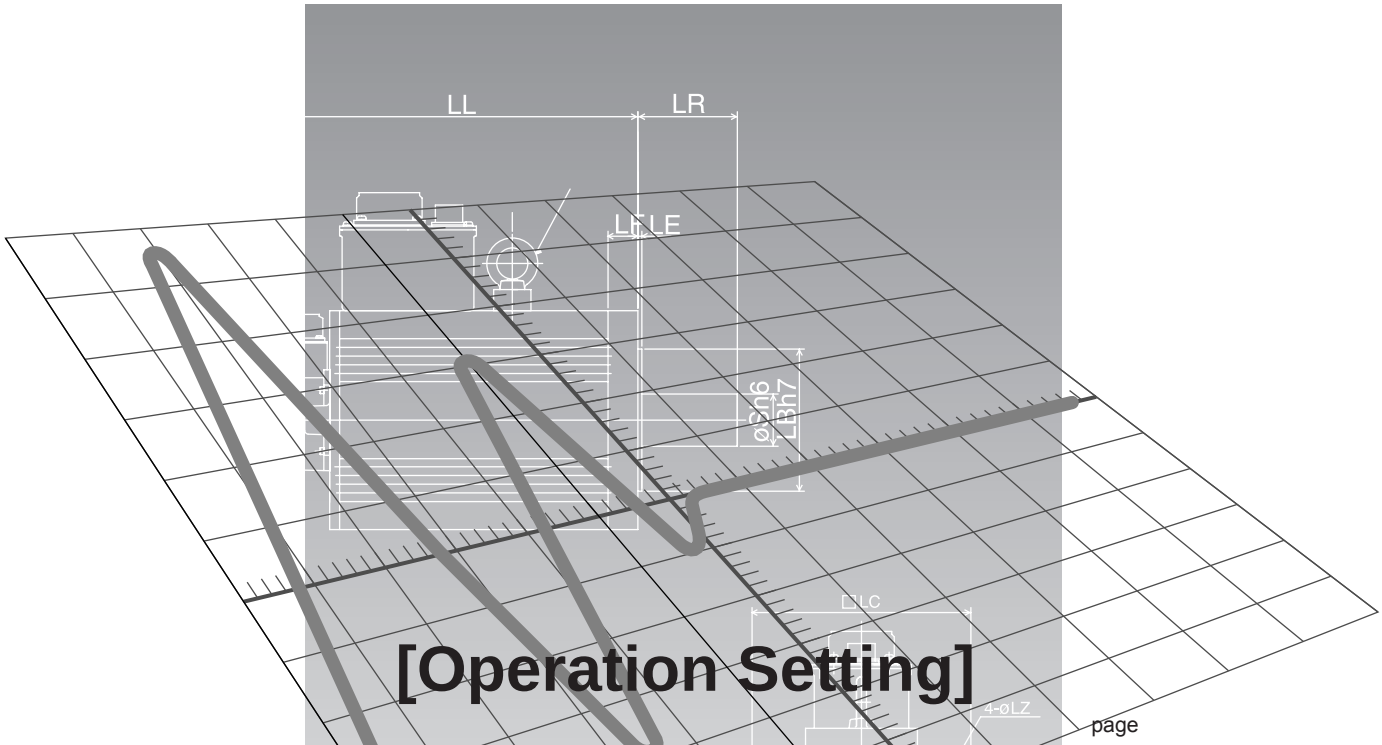

[Operation Setting]

page

Overview of Operation Setting 106

Step Operation 107

Example of Incremental Operation Setting 108
Example of Absolute Operation Setting 109
Example of Rotary Axis Operation Setting 110
Example of Dwell Timer Operation Setting 111

Jog Operation 112

Homing Operation 114

Home Sensor + Z Phase (based on the front end) 116
Home Sensor (based on the front end) 117
Home sensor + Z phase (based on the rear end) 118
Limit Sensor + Z phase 120
Limit Sensor 121
Z Phase Homing 122
Bumping Homing 122
Data Set 123
Homing Offset Operation 124

Emergency Stop Operation/Deceleration-and-Stop Operation 125

Temporary Stop Operation 126

Block Operation 127

Continuous Block Operation 127
Combined Block Operation 128

Sequential Operation 130

S-shaped Acceleration/Deceleration Function ... 131

Timing Chart 132

Operation Timing after Power-ON 132
When an Error (Alarm) Has Occurred (at Servo-ON Command) 133
When an Alarm Has Been Cleared (at Servo-ON Command) .. 134
Servo-ON/OFF Action While the Motor Is at Stall (Servo-Lock) 135
Servo-ON/OFF Action While the Motor Is in Motion 135

Absolute System 136

Outline of Full-Closed Control 140

Overview of Operation Setting

In MINAS A4P, the following operations can be performed.

Step operation P.107	The most basic operation. Specify a point number set in advance when performing the operation. The four types of modes are available, i.e., an incremental operation, absolute operation, rotary axis operation and dwell timer (waiting time).
Jog operation P.112	The motor can be moved in a positive direction or negative direction independently. This is useful for teaching or adjustment.
Homing operation P.114	An operation to detect a home position which is the base of operation. The eight types of homing operations can be performed in A4P. Homing must be completed before performing the step operation etc. Also, homing can be disabled by setting a certain parameter.
Emergency stop/ deceleration-and-stop operation P.125	An active operation can be interrupted and canceled. Emergency stop: An operation stops in a deceleration time specified by a special parameter. Deceleration-and-stop: An operation stops in a deceleration time specified in an operation mode before the start of deceleration.
Temporary stop operation P.126	Active operation can be stopped temporarily and restarted.
Block operation P.127	Several step operations can be performed at a time. The two types of block operations below can be executed. Continuous block operation: Several step operations can be performed continuously. Once an operation starts, the operation continues to a specified point number. Combined block operation: A step operation is performed according to combined several point numbers. This is useful when you want to change the speed during a step operation.
Sequential operation P.130	A point number increments by 1 automatically whenever an operation command is given. A step operation can be performed easily only by turning the STB signal on/off.
S-shaped acceleration/ deceleration operation P.131	An operation can be performed smoothly by executing the start and end of acceleration/deceleration gradually.

<Notice>

- For how to set a step data or parameters, “Hot To Use Console” on page 80.
- When setting the step parameters using “PANATERM®”, speed = V1 to V6, deceleration = A1 to A4 and deceleration = D1 to D4 are shown. This instruction manual describes speed = VEL1 to VEL16, deceleration = ACC1 to ACC4 and deceleration = DEC1 to DEC4.

Step Operation

Positioning can be performed to a specified point by the step operation.
The four types of modes are available, i.e., an incremental operation, absolute operation, rotary axis operation and dwell timer (waiting time).

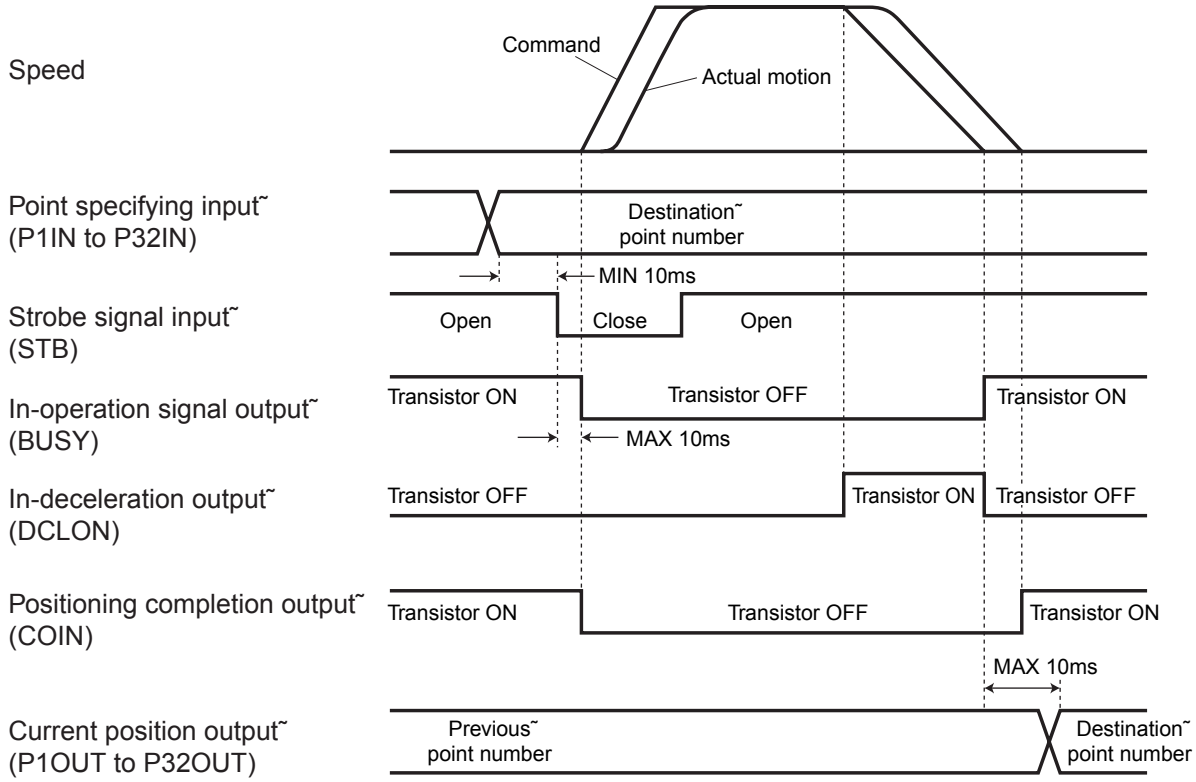

Procedure		Description
(1)˜	Setting of step parameters˜	Set the step parameters referring to the example of each operation setting since page 108.˜ ˜
˜ (2)˜ ˜	Execution of ˜ homing˜	Perform the homing referring to “Homing Operation” on page 114. Any step operation is unacceptable if homing is not completed.˜ This operation is not required if the absolute mode and homing are disabled.˜
(3)˜	Designation of operation point number˜	Specify an operation point number in the point specifying input (P1IN to P32IN: CN X5 Pin 3, 4, 5, 6, 7 and 8).˜
˜ (4)˜ ˜	Start of step operation˜	By connecting (closing) the open strobe signal input (STB: CN X5 Pin 24) to COM- when 10 ms has passed after inputting the point specifying input (P1IN to P32IN), an operation starts according to a set value of a point number specified in procedure (3).˜
˜ ˜ (5)˜ ˜ ˜	˜ Check of operation command execution˜ ˜	Check whether a driver is executed by an operation command. If the driver is executed, open the strobe signal input (STB) again. If a transistor of the in-operation signal output (BUSY: CN X5 Pin 28) turns OFF, an operation is in the execution. Even if an operation completes when the strobe signal (STB) does not return to the OPEN state, the in-operation signal output (BUSY) remains turning OFF.˜
˜ (6)˜ ˜	Check of completion of operation command execution˜	Check the completion of operation command execution with the in-operation signal output (BUSY). If a transistor of the signal returns from OFF to ON, the operation is completed.˜ ˜
˜ (7)	˜ Check of current position output	Check an operation point number executed by the current position output (P1OUT to P32OUT: CN X5 Pin 29, 30, 31, 32, 33 and 34) after checking the operation command execution. The current position output (P1OUT to P32OUT) is updated within 10 ms after a transistor of the in-operation signal output (BUSY) turns ON.

* Positioning completion output/in-deceleration output (COIN/DCLON: CN X5 Pin 27)
In SV.Pr64 (output signal selection), you can select COIN or DCLON to be output. For the timing of tuning the transistor ON/OFF, refer to the diagram above.

Step Operation

Caution

1) If a set value of speed, acceleration or deceleration at a specified point is “0”, an operation trips due to undefined data error protection (error code No. 69) and stops according to an operation at alarm occurrence.
2) If the current position (–2147483647 to 2147483647) overflows when absolute movement is performed continuously in the same direction, an operation trips due to current position overflow error protection (error code No. 70) and stops according to an operation at alarm occurrence. This error can be disabled by 16.Pr51 (Wrap around permission). In this case, however, an absolute position cannot be guaranteed. If you disable the wrap around, use the incremental operation only.
3) If the over-travel inhibit input is enabled in an operating direction during a step operation, an operation trips due to over-travel inhibit detection error protection (error code No. 71) and stops according to an operation at alarm occurrence. In SV.Pr55 (Over-travel inhibit input operation setting), you can specify whether or not to trip an operation.
4) When the motor has exceeded a maximum travel specified by 32.Pr01 (Setting of maximum movement in plus direction) and 32.Pr02 (Setting of maximum movement in minus direction) during a step operation, an operation stops due to maximum travel limit error protection (error code No. 72) and stops according to an operation at alarm occurrence.
5) When the servo driver has tripped, a step operation cannot be executed again unless you input an Alarm Clear command once and then execute the homing. However, the absolute mode and homing are disabled, the step operation can be executed without performing the homing operation.
6) If a motor operation completes although the strobe signal input (STB: CN X5 Pin 24) does not return to the OPEN state after the in-operation signal output (BUSY: CN X5 Pin 28) turns OFF, the in-operation signal output (BUSY) is still in the OFF state. When the in-operation signal output (BUSY) has turned OFF, be sure to return the strobe signal input (STB) to the OPEN state.
7) Any step operation is unacceptable when the in-operation signal output (BUSY) turns OFF (a previous command is being executed).

Step Operation Mode

For a positioning operation in this servo driver, you can select any of the four types of operation modes. For the details of each operation mode, refer to the relevant page.

Operation mode	Description	Relevant page
Incremental operation (Incremental)˜	Operates regarding a set value as relative travel from a current position.˜	P.108˜
Absolute operation (Absolute)˜	Operates regarding a set value as an absolute position of a target.˜	P.109˜
Rotary axis operation (Rotary)˜	Operates regarding a set value as an absolute position per rotation.˜	P.110˜
Dwell timer operation (Dwell time)	Operates regarding a set value as a waiting time.	P.111

* A step data can be set in the point numbers 1 (01h) to 60 (3Ch). For details, refer to the table in “Overview of Point specifying Input” on page 45.
* Do not use the rotary axis operation (Rotary) mode together with the incremental operation (Incremental) or absolute operation (Absolute). Wrap around according to the command position and the number of pulses per rotation at the current position cannot be performed appropriately.

Example of Incremental Operation Setting

In the incremental operation, the motor operates regarding a set value as relative travel from a current position.

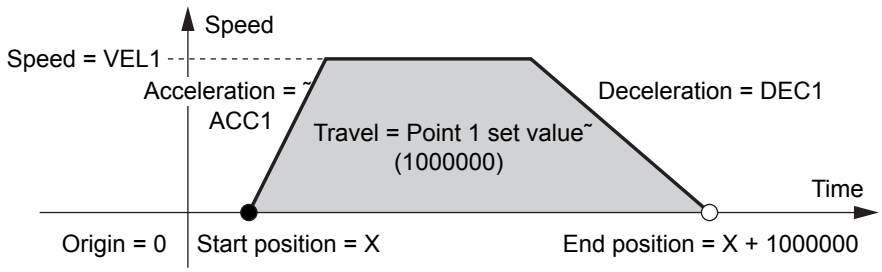

• **Setting of 16-bit positioning parameter**

˜	16.Pr* *	Parameter name
VEL1˜	00˜	Positioning setting first speed˜
ACC1˜	10˜	Positioning acceleration setting 1st˜
DEC1	12	Positioning deceleration setting 1st

1. Set the 16-bit positioning parameter in the table above to any value and specify the step parameter as shown below.˜
2. Perform homing. (Refer to “Homing” on page 114.)˜
3. Specify the point 1 when the servo turns on and connect the strobe signal input (STB: CN X5 Pin 24) to COM–. Then, an operation starts.

• **Setting of step parameter**

No.	Operation mode	Position/Waiting time	Speed	Acceleration	Deceleration	Block
01	Incremental operation (Incremental)	1000000	VEL1	ACC1	DEC1	Single

Example of Absolute Operation Setting

In the absolute operation, the motor operates regarding a set value as absolute position based on origin = “0”. The chart below shows an example to specify the point 1 to the absolute operation for movement.

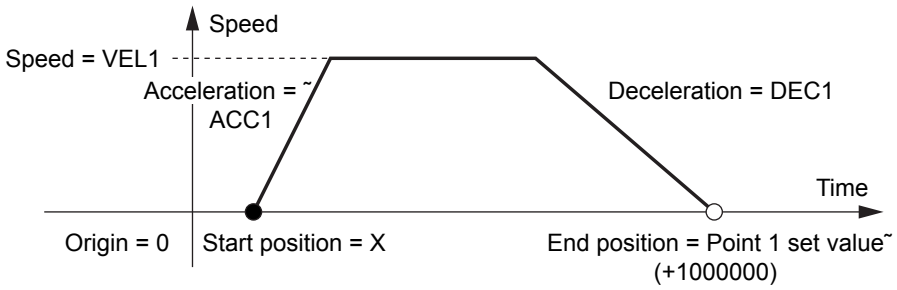

• **Setting of 16-bit positioning parameter**

˜	16.Pr* *	Parameter name
VEL1˜	00˜	Positioning setting first speed˜
ACC1˜	10˜	Positioning acceleration setting 1st˜
DEC1	12	Positioning deceleration setting 1st

1. Set the 16-bit positioning parameter in the table above and specify the step parameter as shown below.˜
2. Perform homing. (Refer to “Homing” on page 114.)˜
3. Specify the point 1 when the servo turns on and connect the strobe signal input (STB: CN X5 Pin 24) to COM–. Then, an operation starts.

• **Setting of step parameter**

No.	Operation mode	Position/Waiting time	Speed	Acceleration	Deceleration	Block
01	Absolute operation (Absolute)	1000000	VEL1	ACC1	DEC1	Single

Caution

1) Wrap around

If 16.Pr51 (wrap around accepted) is set to “1”, although an error does not occur when wrap around happens, an absolute position cannot be guaranteed. If you will combine the absolute operation mode and incremental operation mode with each other, take care not to cause the wrap around or do not use the absolute operation.

Step Operation

Example of Rotary Axis Operation Setting

If the rotary axis operation is specified, the shaft moves in a direction nearest from the current position to a target position of a step parameter that the rotary axis operation (rotary) has been specified regarding 32.Pr03 (Movement per rotation in rotation coordinates) as 360 degrees.
A current position of running motor is automatically limited in a range between 0 and [travel per rotation at a rotary coordinate –1] as shown below.

- If travel per rotation at a rotary coordinate is set to "10000"

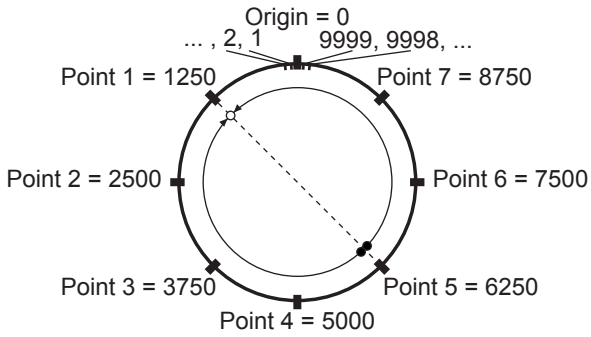

- **Setting of 32-bit positioning parameter**

32.Pr* *	Parameter name	Input value
03	Movement per rotation in rotation coordinates	10000

- **Setting of step parameter**

No.	Operation mode	Position/Waiting time	Speed	Acceleration	Deceleration	Block
01	Rotary axis operation (Rotary)	1250	VEL1	ACC1	DEC1	Single
02	Rotary axis operation (Rotary)	2500	VEL1	ACC1	DEC1	Single
03	Rotary axis operation (Rotary)	3750	VEL1	ACC1	DEC1	Single
04	Rotary axis operation (Rotary)	5000	VEL1	ACC1	DEC1	Single
05	Rotary axis operation (Rotary)	6250	VEL1	ACC1	DEC1	Single
06	Rotary axis operation (Rotary)	7500	VEL1	ACC1	DEC1	Single
07	Rotary axis operation (Rotary)	8750	VEL1	ACC1	DEC1	Single

Caution

1) Control mode

The rotary axis operation is enabled only for the position control (SV.Pr02 = 0). If the rotary axis operation is specified for the full-closed control (SV.Pr02 = 6), an error code No. 69 (undefined data error protection) is shown.

2) Restrictions on parameter

If the rotary axis operation is used, the restrictions below are imposed to the parameters not to exceed the limitation of the current position.

PrNo.	Name	Set value	Description
SV.Pr0B	Absolute encoder set up	1	The rotary axis operation requires homing. If "0" or "2" is set, an error code No. 69 (undefined data error protection) is shown when the rotary shaft operation starts.
16.Pr37	Home complete type	1	Be sure to set "1" if you use the home offset function.
16.Pr38	Homing skip	0	The rotary axis operation requires homing.
16.Pr54	Block operation type	0	The combined block operation cannot be used.
32.Pr00	Home offset		For 16.Pr37 = 0, set "0". For 16.Pr37 = 0, set a value in a range between 0 and [movement per rotation at a rotary coordinate - 1].
32.Pr03	Setting of maximum movement in plus direction	2 to 1073741824	For any invalid value out of specified range, an error code No. 69 (undefined data error protection) is shown when the positioning operation starts.
32.Pr01	Setting of maximum movement in minus direction	0	A maximum travel limitation error protection cannot be used for the rotary axis operation.
32.Pr02	Movement per rotation in rotation coordinates		

3) Setting of step data

- Do not use the rotary axis operation (Rotary) mode together with the incremental operation (Incremental) or absolute operation (Absolute).
- If a step data set value specified for the rotary axis operation is out of a range between 0 and [movement per rotation at a rotary coordinate –1], an error code No. 69 (undefined data error protection) is shown.

4) Jog operation

If you use the motor in the rotary axis operation, do not perform the jog operation after homing completes. The motor may exceed limitation of the current position. If you perform the jog operation by mistake, execute the homing again.

5) Servo off

Also if the servo has turned off when the motor is used in the rotary axis operation, the motor may exceed limitation of the current position. Be sure to execute the homing again after the servo turns on.

Example of Dwell Timer Operation Setting

In the dwell timer operation, the motor operates regarding a set value as waiting time. The dwell time operation is not used independently. This operation is used as waiting time between the points in the block operation.
The chart below shows an example to set the point 1 in the dwell timer after the absolute operation at the point 2 and perform the relative travel at the point 3 after a specified time has passed.

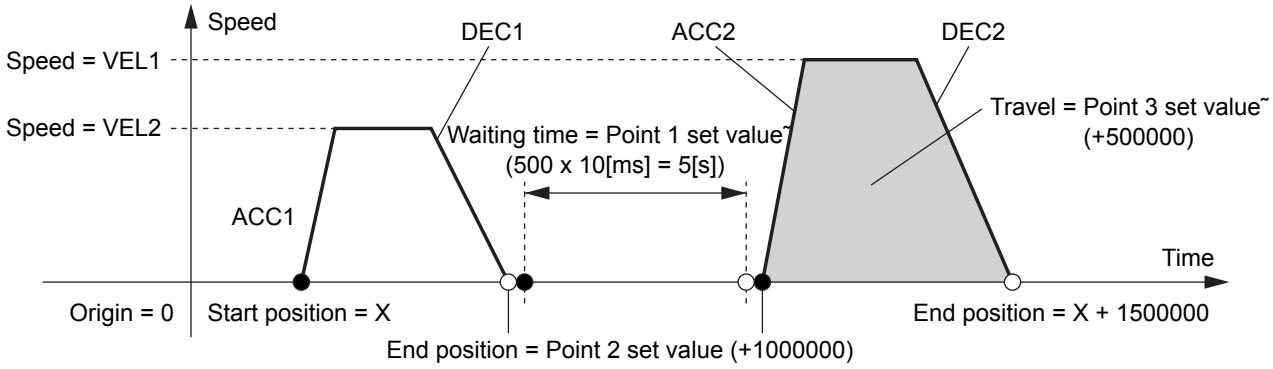

• Setting of 16-bit positioning parameter

˜	16.Pr* *	Parameter name
VEL1, VEL2˜	00, 01˜	Positioning setting first speed, second speed˜
ACC1, ACC2˜	10, 14˜	Positioning acceleration setting 1st, 2nd˜
DEC1, DEC2	12, 16	Positioning deceleration setting 1st, 2nd

1. Set the 16-bit positioning parameter in the table above to any value and specify the step parameter as shown below.˜
2. Perform homing. (Refer to “Homing Operation” on page 114.)˜
3. Specify the point 1 after the point 2 operation has completed and connect the strobe signal input (STB: CN X5 Pin 24) to COM–. Then, a waiting time operation starts. When a waiting time has passed, the in-operation signal output (BUSY: CN X5 Pin 28) turns on and the next point 3 operation can be specified.

• Setting of step parameter

No.	Operation mode	Position/Waiting time	Speed	Acceleration	Deceleration	Block
01˜	Dwell timer operation (Dwell time)˜	500˜	VEL1˜	ACC1˜	DEC1˜	Single˜
02˜	Absolute operation (Absolute)˜	1000000˜	VEL1˜	ACC1˜	DEC1˜	Single˜
03	Incremental operation (Incremental)	500000	VEL2	ACC2	DEC2	Single

Caution

1) If a waiting time set value (unit: 10 ms) is larger than 214748364, the waiting time is a maximum of 214748364 x 10 ms.
2) To interrupt the dwell timer operation, input emergency stop or deceleration-and-stop signal assigned by the multi function input (EX-IN1 and EX-IN2: CN X5 Pin 22 and 25).

Jog Operation

Jog Operation

The motor can be moved in a positive direction or negative direction independently.

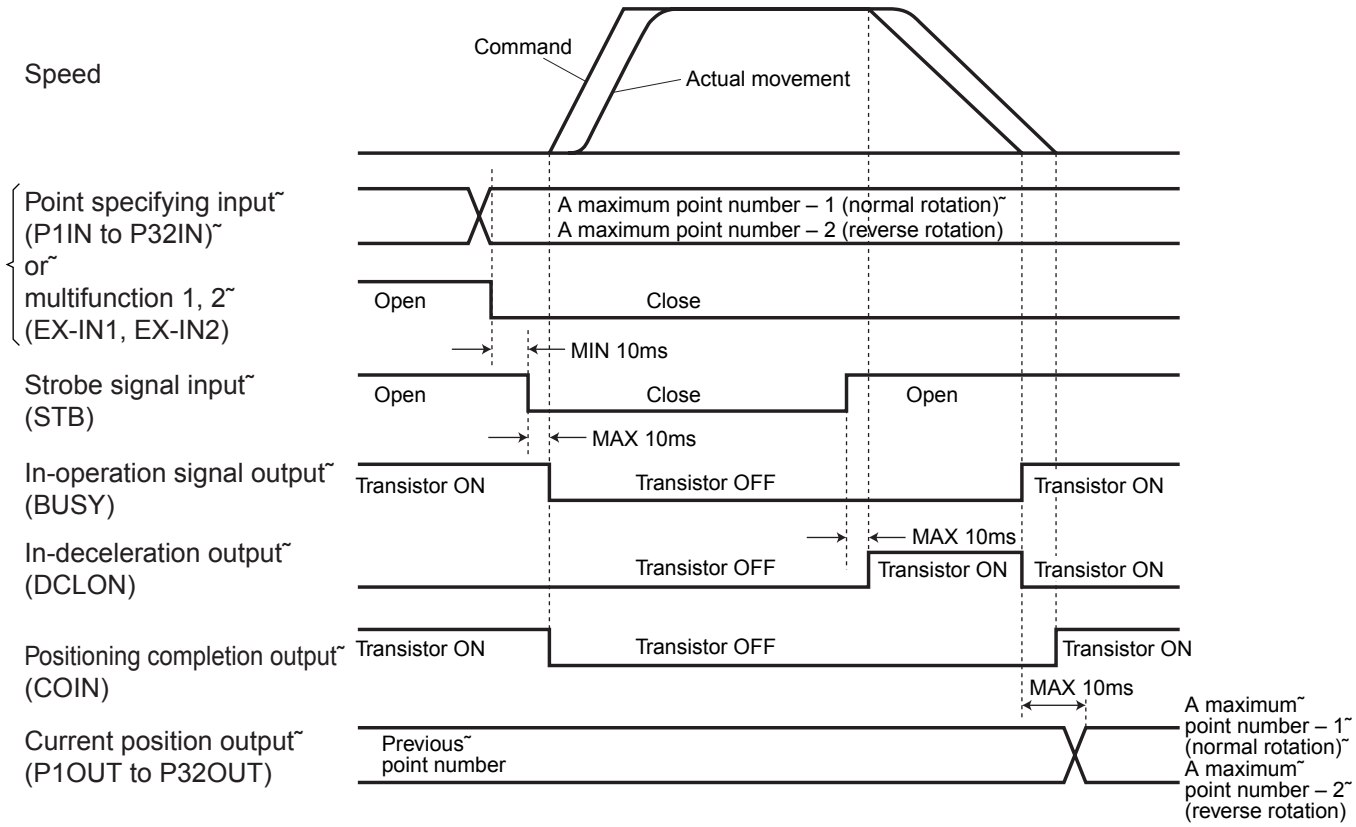

Procedure		Description
(1)˜	Setting of parameters related to jog operation˜	Specify the parameters 16.Pr No. 40 to No. 45 related to the jog operation. For details, refer to “List of Parameters Related to Jog Operation” on page 113.˜
˜ ˜ ˜ ˜ ˜ (2)˜ ˜ ˜ ˜ ˜ ˜	˜ ˜ ˜ ˜ ˜ Start of jog operation˜ ˜ ˜ ˜ ˜ ˜	There are two ways of starting the jog operation.˜ 1) Point specifying input (P1IN to P32IN: CN X5 Pin 3, 4, 5, 6, 7 and 8)˜ To start the operation, specify a maximum point - 1 for high-speed normal rotation jog or a maximum point -2 for high-speed reverse rotation jog and, after 10 ms has passed, connect the strobe signal input (STB: CN X5 Pin 24) to COM- (i.e., close the opened connection).˜ * The maximum point number depends on a set value of SV.Pr57 (selection of number of input points).˜ 2) Multi function input 1 and 2 (EX-IN1 and EX-IN2: CN X5 Pin 22 and 25)˜ To start the operation, specify the high-speed normal rotation jog or high-speed reverse rotation jog by SV.Pr5A (multi function input 1 signal selection) or SV.Pr5C (multi function input 2 signal selection), input the multi function input 1 or 2 and, after 10 ms has passed, connect the strobe signal input (STB: CN X5 Pin 24) to COM– (i.e., close the opened connection).˜
(3)˜	Check of command execution˜	When the in-operation signal output (BUSY: CN X5 Pin 28) turns OFF, an operation becomes ready to be executed.˜
(4)˜	Stop of jog operation˜ ˜	When you make the strobe signal input (STB) open, an operation decelerates and stops. While the contact of the strobe signal input is closed, the jog operation continues.˜
˜ (5)˜ ˜	Check of completion of operation command execution˜	Check the completion of operation command execution through the in-operation signal output (BUSY). When a transistor of the signal has returned from OFF into ON, this means that the operation has completed.˜
˜ (6)	˜ Check of current position output	Check an operation point executed by the current position output (P1OUT to P32OUT: CN X5 Pin 29, 30, 31, 32, 33 and 34) after checking the operation command execution. The current position output (P1OUT to P32OUT) is updated within 10 ms after a transistor of the in-operation signal output (BUSY) has returned to ON.

* Positioning completion output/in-deceleration output (COIN/DCLON: CN X5 Pin 27)
In SV.Pr64 (output signal selection), you can select COIN or DCLON to be output. For the timing of tuning the transistor ON/OFF, refer to the diagram above.

• **Parameters related to jog operation**

Set the parameters below when performing the jog operation.

16.Pr* *	Description
˜ 40˜ ˜	Specify the speed of low-speed jog operation (0 to 6000 r/min). Use this parameter only when performing the jog operation from the console (optional). For details, refer to page 90.˜
41˜ ˜	Specify the speed of high-speed jog operation (0 to 6000 r/min). For the jog operation by point specifying or multi function input (refer to procedure (2) on page 112), specify the jog speed using this parameter.˜
42˜ ˜	Specify the acceleration for the jog operation. Available acceleration time is in a range between 0 and 3000 r/min.˜
43˜ ˜	Specify the S-shaped acceleration for the jog operation. Specify the S-shaped control time during acceleration time (0 to 1000 r/min). For details, refer to page 131.˜
44˜ ˜	Specify the deceleration for the jog operation. Available acceleration time is in a range between 3000 and 0 r/min.˜
45	Specify the S-shaped deceleration for the jog operation. Specify the S-shaped control time during deceleration time (0 to 1000 r/min). For details, refer to page 131.

Caution

1) If any of the set values of the parameters below is “0”, an operation trips due to undefined data error protection (error code No. 69) and stops according to an operation at alarm occurrence.
   - 16.Pr40 (Jog speed (low))
   - 16.Pr41 (Jog speed (high))
   - 16.Pr42 (Jog operation acceleration setting)
   - 16.Pr44 (Jog operation deceleration setting)
2) If the current position (–2147483647 to 2147483647) overflows when the jog operation is performed continuously in the same direction, an operation trips due to current position overflow error protection (error code No. 70) and stops according to an operation at alarm occurrence. This error can be disabled by 16.Pr51 (wrap around permission). In this case, however, an absolute position cannot be guaranteed. If you disable the wrap around, use the incremental operation only.
3) If the over-travel inhibit input is enabled in an operating direction during the jog operation after homing has completed, an operation trips due to over-travel inhibit detection error protection (error code No. 71) and stops according to an operation at alarm occurrence. In the SV.Pr55 (Over-travel inhibit input operation setting), you can specify whether or not to trip the deceleration operation. However, if the over-travel inhibit input in the operating direction is enabled during the jog operation before homing completes, an error does not occur although the motor complies with the deceleration pattern of SV.Pr55.
4) When the motor has exceeded a maximum travel specified by 32.Pr01 (Setting of maximum movement in plus direction) and 32.Pr02 (Setting of maximum movement in minus direction) during the jog operation after homing has completed, an operation stops due to maximum travel limit error protection (error code No. 72) and stops according to an operation at alarm occurrence. However, the maximum travel limit error protection does not work during the jog operation before homing completes.
5) For the jog operation by an external signal, high-speed normal rotation jog operation and high-speed reverse rotation jog operation only can be executed. (If the console is used, low-speed normal rotation jog operation and low-speed reverse rotation jog operation also can be performed.)
6) Even if you specify the high-speed normal rotation jog and high-speed reverse rotation jog in the multi function input (EX-IN1 and EX-IN2) and turn ON the strobe signal input (STB) when both of EX-IN1 and EX-IN2 turns ON, the motor does not work.
7) If the jog operation is stopped by a stop command (emergency stop, deceleration-and-stop or temporary stop), the current position output (P1OUT to P3OUT) is not updated.

Homing Operation

Homing Operation

To start a step operation after turning the power supply on, you need to execute the homing to detect a home position as the base. Homing must be completed in advance. According to your intended purpose, select one mode in the “Homing Mode List” below and execute it.
For A) below, homing is not required because the homing is completed when the power supply turns on.

A) Homing is completed when the power supply turns on

- “0” or “2” is set to SV.Pr0B (absolute encoder setting) using an absolute encoder or absolute external scale.
  When homing is executed for this setting, an absolute position corresponding to the hone position is stored in EEPROM of the driver. If the absolute position when homing has been executed last is set to the hone position, no homing is required.
  For details, refer to “Absolute System” on page 136.
- If “1” (homing not required) is set to 16.Pr38 (Homing skip)
  For this setting, set a motor position when the power supply turn on to “32.Pr00 (Home offset) set value”.

B) Homing is not completed

- After the power supply turns on, excluding the case A) above
  Execute the homing. Then, the homing is completed.
- When an alarm is given, excluding the case A) above
  If the setting (the case A) above) that the homing is required when the power supply turns on is not satisfied, the homing has not yet been completed when an alarm has been given.
  In this case, eliminate the cause of the alarm, clear the alarm and execute the homing. Then, the homing can be completed.
- When the homing starts
  The homing is not completed even if the homing starts. When the homing finishes normally, the homing is completed. If the homing is interrupted due to input of an operation stop (emergency stop, temporary stop or deceleration-and-stop), servo off, trip, etc., the homing is not completed. Retry the homing from the beginning.
- When the normal auto-tuning or frequency characteristics measurement is executed
  Even if the normal auto-tuning is executed by a console or “PANATERM®” or the frequency characteristics measurement is executed by “PANATERM®”, the homing is not completed. Execute the homing again. Otherwise, for the setting A) above, the homing can be completed by turning the power supply on again.

Homing Mode List

The table below lists the available homing modes selected by combining 16.Pr36 (Homing type) and control mode (SV.Pr02) with each other. For the details of each mode, refer to the relevant page (page 116 to page 123).

Operation	16-bit positioning parameter No. 36 (Homing type setting)	Positioning control	Full-closed control	Relevant page
Home sensor + Z phase (based on the front end)	0~	○	×	P.116~
Home sensor (based on the front end)	1~	○	○	P.117~
Home sensor + Z phase (based on the rear end)	2~	○	×	P.118~
Limit sensor + Z phase	3~	○	×	P.120~
Limit sensor	4~	○	○	P.121~
Z phase homing	5~	○	×	P.122~
Bumping homing	6~	○	○	P.122~
Data set	7	○	○	P.123

Caution

In the table above, “○” means “Available” and “×” means “Unavailable (error code No. 68 (homing error protection) is shown)”.

A chart of I/O signal timing during homing and an operating procedure are shown as an example of the case that 16.Pr36 (Homing type) is “0” (Home sensor + Z phase (based on the front end)). The same procedure is performed also in any other homing mode.

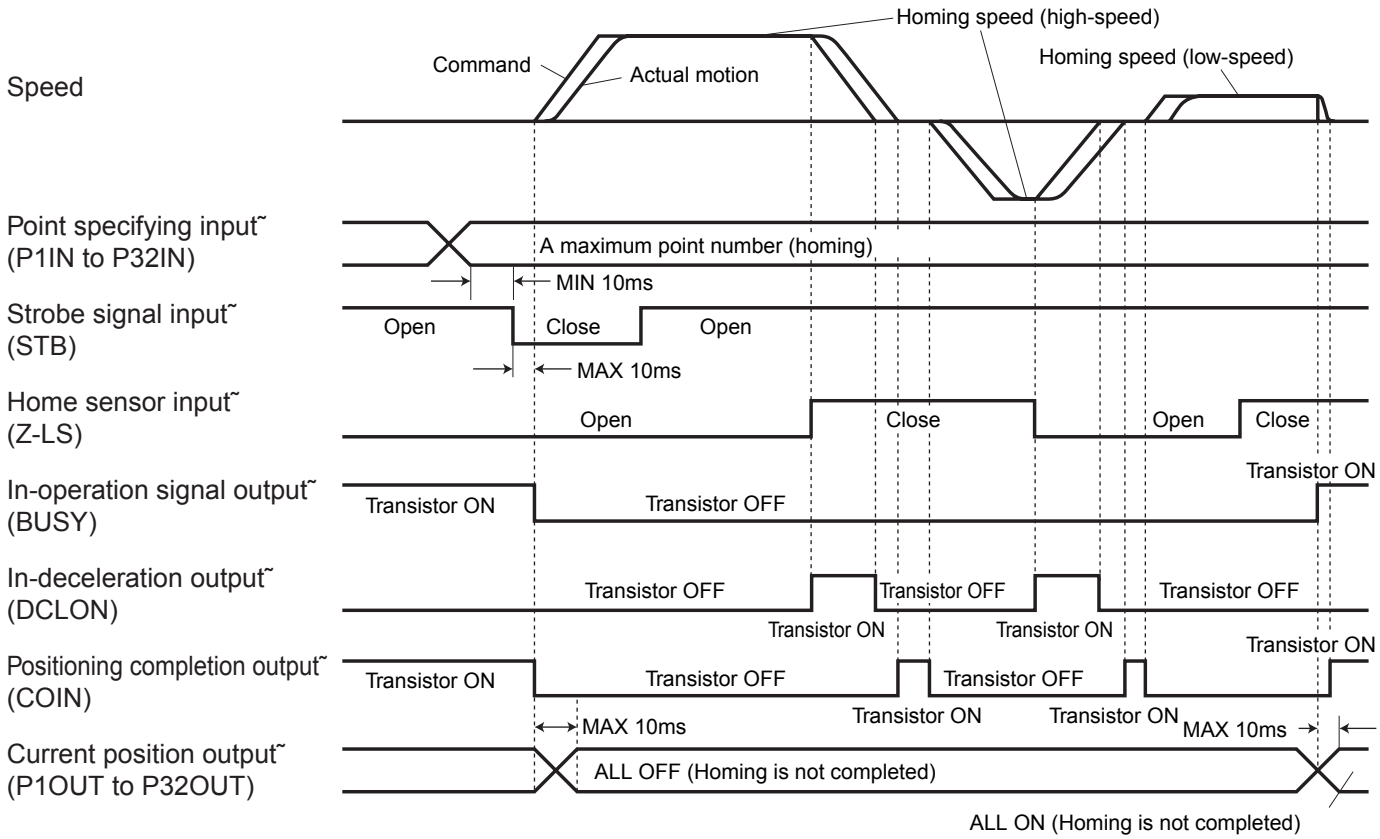

Procedure		Description
˜ (1)˜ ˜	Setting of parameters related to homing operation˜	Specify 16.Pr30 (homing speed (high-speed)), 16.Pr31 (homing speed (low-speed)), 16.Pr33 (homing acceleration setting), 16.Pr34 (homing deceleration setting) and 16.Pr35 (homing direction setting).˜
(2)˜	Designation of point number˜	Specify a maximum point number depending on SV.Pr57 (selection of number of input points), using the point specifying input (P1IN to P32IN: CN X5 Pin 3, 4, 5, 6, 7 and 8).˜
˜ (3)˜ ˜	Start of homing operation˜	By connecting (closing) the open strobe signal input (STB: CN X5 Pin 24) to COM– when 10 ms has passed after inputting the point specifying input (P1IN to P32IN), an operation starts according to a set value of a point number specified in procedure (3).˜
˜ (4)˜ ˜	˜ Check of operation command execution˜ ˜	Check whether a driver is executed by an operation command. If the driver is executed, open the strobe signal input (STB) again. If a transistor of the in-operation signal output (BUSY: CN X5 Pin 28) turns OFF, an operation is in the execution. Even if an operation completes when the strobe signal (STB) does not return to the OPEN state, the in-operation signal output (BUSY) remains OFF.˜
˜ (5)˜ ˜	Check of completion of operation command execution˜	Check the completion of operation command execution with the in-operation signal output (BUSY). If a transistor of the signal returns from OFF to ON, the operation is completed.˜ ˜
˜ (6)	˜ Check of current position output	Check that the current position output (P1OUT to P32OUT: CN X5 Pin 29, 30, 31, 32, 33 and 34) is “ALL ON” (homing has been completed) after checking the operation command execution. The current position output (P1OUT to P32OUT) is updated within 10 ms after a transistor of the in-operation signal output (BUSY) turns ON.

* Positioning completion output/in-deceleration output (COIN/DCLON: CN X5 Pin 27)
In SV.Pr64 (output signal selection), you can select COIN or DCLON to be output. For the timing of tuning the transistor ON/OFF, refer to the diagram above.

Caution

Because a command position and current position are preset at the instant when a home position has been detected, COIN turns ON momentarily and the motor overruns a little and returns. Then, COIN turns OFF/ON according to the positional deviation.

Homing Operation

Home Sensor + Z Phase (based on the front end)

Example: Z phase count = 3 at an operation in a positive direction

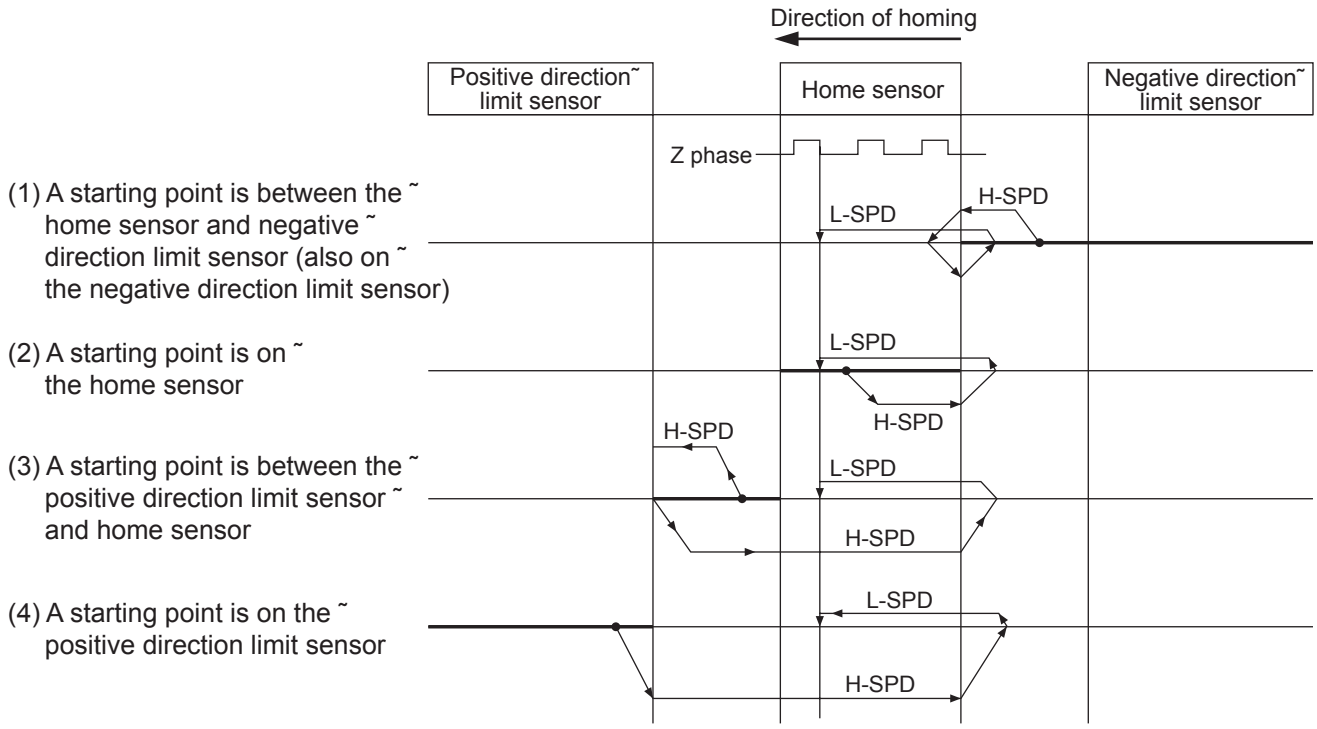

Detect the home sensor (at the front end) in a direction of homing by 16.Pr30 (Homing speed (high)), get out of the home sensor area once and detect the home sensor (at the front end) by 16.Pr31 (Homing speed (low)) again. After that, count the Z phase specified times by 16.Pr3B (Homing Z-phase count setting) and define that point as a home position.

• Parameters related to this operation

Parameter number		Description
16.Pr**	30	Specify the high speed for the homing operation (0 to 6000 r/min).
	31	Specify the low speed for the homing operation (0 to 6000 r/min).
	32	Specify the offset operation speed if the home offset operation is performed (0 to 6000 r/min). For the home offset operation, refer to page 124.
	33	Specify the acceleration for the homing operation in a range between 0 to 3000 r/min.
	34	Specify the deceleration for the homing operation in a range between 3000 to 0 r/min.
	35	Specify an operating direction for the homing. (0: positive direction, 1: negative direction)
	36	Specify a type of homing. ([0]: Home sensor + Z phase (based on the front end))
	37	Specify whether or not to perform the home offset operation. (0: Not perform, 1: Perform) For the home offset operation, refer to page 124.
	3B	Specify the Z phase that an operation stops. ([3] (the 3rd Z phase) in this example)
32.Pr**	01	Specify the home offset (–2147483647 to 2147483647 pulses). If the home offset is not required, specify “0”.

Caution

1) If any of the set values of the parameters below is “0”, an operation trips due to homing error protection (error code No. 68) and stops according to an operation at alarm occurrence.
   - 16.Pr30 (Homing speed (high))
   - 16.Pr31 (Homing speed (low))
   - 16.Pr33 (Homing acceleration setting)
   - 16.Pr34 (Homing deceleration setting)

2) Also, if the over-travel inhibit input is enabled in an operating direction under any of the conditions below during homing, an operation trips due to homing error protection (error code No. 68) and stops according to an operation at alarm occurrence.
   - After the reversal due to detection of a limit sensor in a direction of homing, the change in the home sensor ON into OFF could not be detected and a limit sensor in the reverse direction, not in a direction of homing, has been detected.
   - A limit sensor in a traveling direction has been detected during detection of specified count of Z phase How to decelerate at the detection of a limit sensor depends on the settings of SV.Pr55 (Over-travel inhibit input operation setting). (For a set value = 0 or 2, deceleration-and-stop. For a set value = 1 or 3, stop in the deceleration time “0”.)
3) We would like to ask you to design so that a sensor signal does not vary (beyond the sensor signal width) when the motor is decelerating after it detects the home sensor or limit sensor.
4) We would like to ask you to design so that the Z phase of the motor does not turn on near the Z phase detection start position (L-SPD in the home sensor area in a figure shown at the previous page). The number of Z phase counts may vary. A position where the Z phase is counted specified times is defined as the home position, even if the position is out of the home sensor area during Z phase count.

Home Sensor (based on the front end)

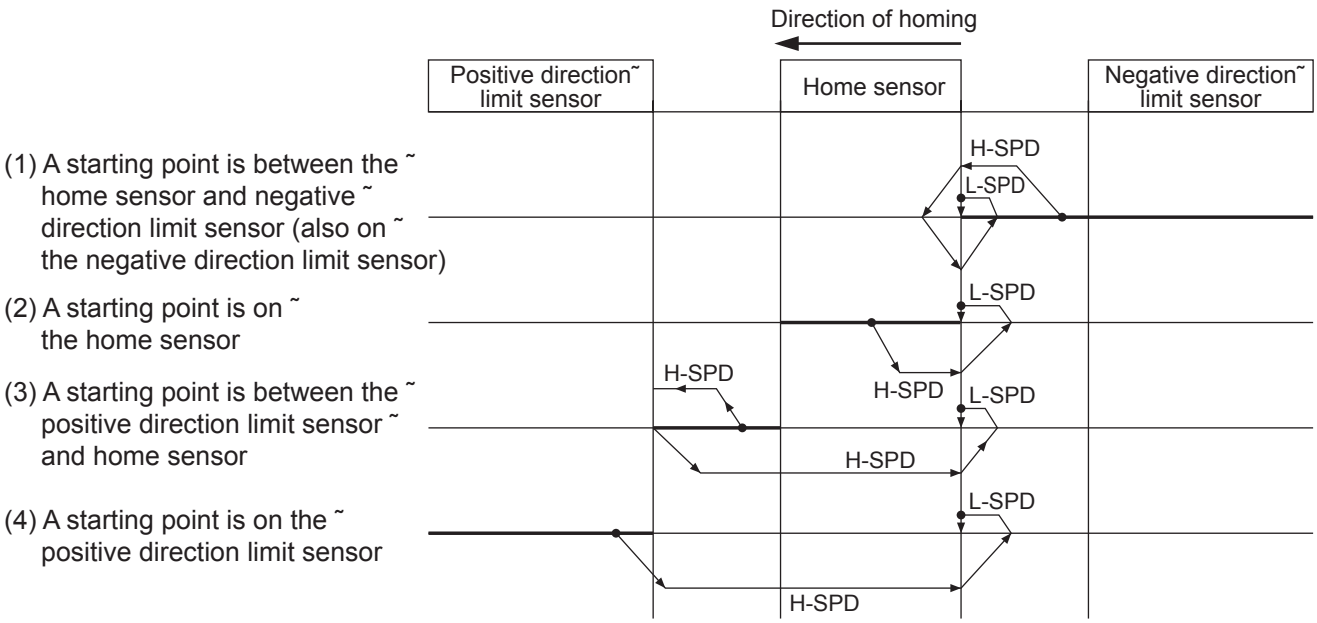

Detect the home sensor (at the front end) in a direction of homing by 16.Pr30 (Homing speed (high)), get out of the home sensor area once, detect the home sensor (at the front end) by 16.Pr31 (Homing speed (low)) again and define that point as a home position.

• Parameters related to this operation

Parameter number		Description
16.Pr**	30	Specify the high speed for the homing operation (0 to 6000 r/min).
	31	Specify the low speed for the homing operation (0 to 6000 r/min).
	32	Specify the offset operation speed if the home offset operation is performed (0 to 6000 r/min). For the home offset operation, refer to page 124.
	33	Specify the acceleration for the homing operation in a range between 0 to 3000 r/min.
	34	Specify the deceleration for the homing operation in a range between 3000 to 0 r/min.
	35	Specify an operating direction for the homing. (0: positive direction, 1: negative direction)
	36	Specify a type of homing. ([1]: Home sensor (based on the front end))
	37	Specify whether or not to perform the home offset operation. (0: Not perform, 1: Perform) For the home offset operation, refer to page 124.
32.Pr**	01	Specify the home offset (–2147483647 to 2147483647 pulses). If the home offset is not required, specify “0”.

Homing Operation

Caution

1) If any of the set values of the parameters below is “0”, an operation trips due to homing error protection (error code No. 68) and stops according to an operation at alarm occurrence.
   - 16.Pr30 (Homing speed (high))
   - 16.Pr31 (Homing speed (low))
   - 16.Pr33 (Homing acceleration setting)
   - 16.Pr34 (Homing deceleration setting)
2) Also, if the over-travel inhibit input is enabled in an operating direction under any of the conditions below during homing, an operation trips due to homing error protection (error code No. 68) and stops according to an operation at alarm occurrence.
   - After the reversal due to detection of a limit sensor in a direction of homing, the change in the home sensor ON into OFF could not be detected and a limit sensor in the reverse direction, not in a direction of homing, has been detected.
     How to decelerate at the detection of a limit sensor depends on the settings of SV.Pr55 (Over-travel inhibit input operation setting). (For a set value = 0 or 2, deceleration-and-stop. For a set value = 1 or 3, stop in the deceleration time “0”.)
3) We would like to ask you to design so that a sensor signal does not vary (beyond the sensor signal width) when the motor is decelerating after it detects the home sensor or limit sensor.
4) In this system, delay time of a maximum of 2 ms is caused when detecting the home sensor (front end) at the • part and, therefore, the home position varies to the extent of a maximum of homing speed (low) multiplied by 2 (ms).

Home sensor + Z phase (based on the rear end)

Example: Z phase count = 3 at an operation in a positive direction

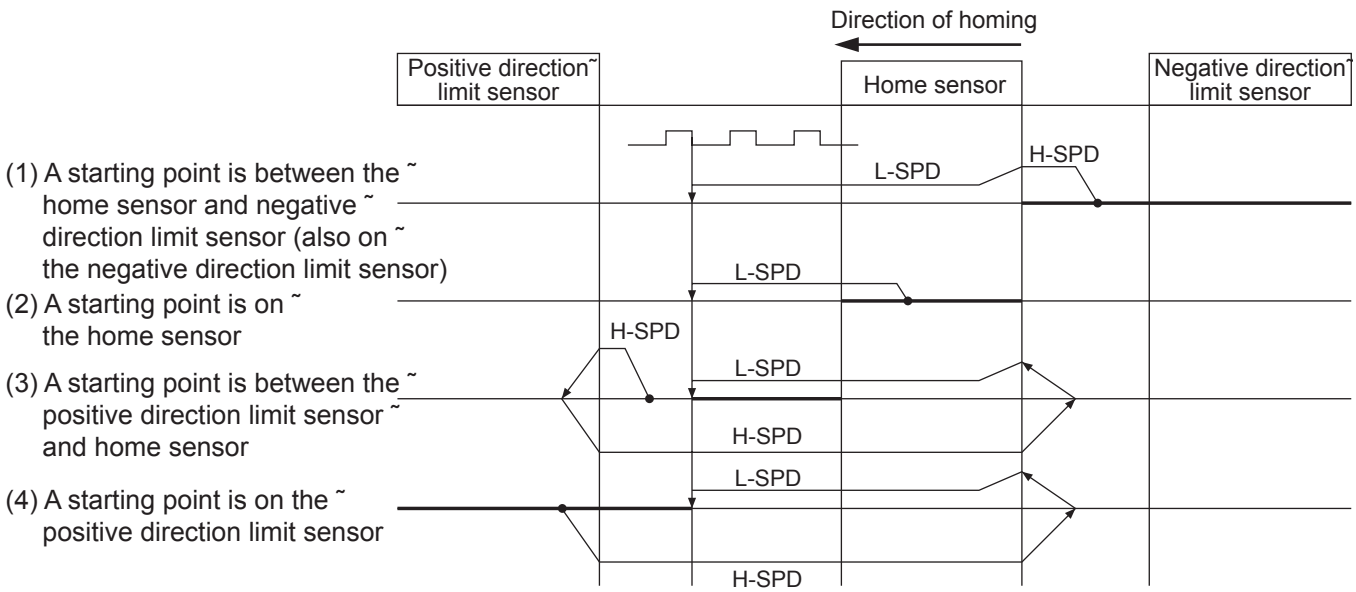

Detect the home sensor (at the front end) in a direction of homing by 16.Pr30 (Homing speed (high)), decelerate to 16.Pr31 (Homing speed (low)), detect the home sensor (at the rear end) turning off, count the Z phase specified times by 16.Pr3B (Homing Z phase count setting) and define that point as a home position.

• Parameters related to this operation

Parameter number		Description
~ ~ ~ ~ ~ 16.Pr**~ ~ ~ ~ ~ ~	30~	Specify the high speed for the homing operation (0 to 6000 r/min).~
	31~	Specify the low speed for the homing operation (0 to 6000 r/min).~
	32~	Specify the offset operation speed if the home offset operation is performed (0 to 6000 r/min). For the home offset operation, refer to page 124.~
	33~	Specify the acceleration for the homing operation in a range between 0 to 3000 r/min.~
	34~	Specify the deceleration for the homing operation in a range between 3000 to 0 r/min.~
	35~	Specify an operating direction for the homing. (0: positive direction, 1: negative direction)~
	36~	Specify a type of homing. ([2]: Home sensor + Z phase (based on the rear end))~
	37~	Specify whether or not to perform the home offset operation. (0: Not perform, 1: Perform) For the home offset operation, refer to page 124.~
	3B~	Specify the Z phase that an operation stops. ([3] (the 3rd Z phase) in this example)~
32.Pr**	01	Specify the home offset (–2147483647 to 2147483647 pulses). If the home offset is not required, specify “0”.

Caution

1) If any of the set values of the parameters below is “0”, an operation trips due to homing error protection (error code No. 68) and stops according to an operation at alarm occurrence.
   - 16.Pr30 (Homing speed (high))
   - 16.Pr31 (Homing speed (low))
   - 16.Pr33 (Homing acceleration setting)
   - 16.Pr34 (Homing deceleration setting)
2) Also, if the over-travel inhibit input is enabled in an operating direction under any of the conditions below during homing, an operation trips due to homing error protection (error code No. 68) and stops according to an operation at alarm occurrence.
   - After the reversal due to detection of a limit sensor in a direction of homing, the change in the home sensor ON into OFF could not be detected and a limit sensor in the reverse direction, not in a direction of homing, has been detected.
   - A limit sensor in a traveling direction has been detected during detection of the home sensor at the rear end
   - A limit sensor in a traveling direction has been detected during detection of specified count of Z phase

   How to decelerate at the detection of a limit sensor depends on the settings of the servo parameter No. 55 (over-travel inhibit input operation setting). (For a set value = 0 or 2, deceleration-and-stop. For a set value = 1 or 3, stop in the deceleration time “0”.)
3) We would like to ask you to design so that a sensor signal does not vary (beyond the sensor signal width) when the motor is decelerating after it detects the home sensor or limit sensor.
4) We would like to ask you to design so that the Z phase of the motor does not turn on near the Z phase detection start position (L-SPD out of the home sensor area in a figure shown above). The number of Z phase counts may vary. A position where the Z phase is counted specified times is defined as the home position, even if the position is out of the home sensor area during Z phase count.

Homing Operation

Limit Sensor + Z phase

Example: Z phase count = 3 at an operation in a positive direction

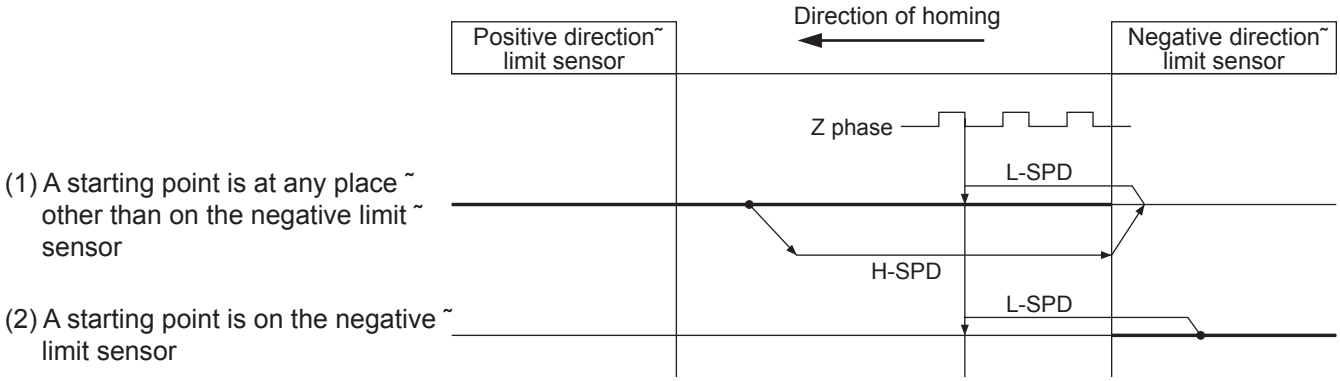

Detect the home sensor and the limit sensor in a reverse direction, not in a direction of homing, by 16.Pr30 (Homing speed (high)), decelerate, and stop. After that, detect the limit sensor turning off in a direction of homing by 16.Pr31 (Homing speed (low)), count the Z phase specified times by 16.Pr3B (homing Z phase count setting) and define that point as a home position.

• Parameters related to this operation

Parameter number		Description
16.Pr**	30	Specify the high speed for the homing operation (0 to 6000 r/min).
	31	Specify the low speed for the homing operation (0 to 6000 r/min).
	32	Specify the offset operation speed if the home offset operation is performed (0 to 6000 r/min). For the home offset operation, refer to page 124.
	33	Specify the acceleration for the homing operation in a range between 0 to 3000 r/min.
	34	Specify the deceleration for the homing operation in a range between 3000 to 0 r/min.
	35	Specify an operating direction for the homing. (0: positive direction, 1: negative direction)
	36	Specify a type of homing. ([3]: Limit sensor + Z phase)
	37	Specify whether or not to perform the home offset operation. (0: Not perform, 1: Perform) For the home offset operation, refer to page 124.
	3B	Specify the Z phase that an operation stops. ([3] (the 3rd Z phase) in this example)
32.Pr**	01	Specify the home offset (–2147483647 to 2147483647 pulses). If the home offset is not required, specify “0”.

Caution

1) If any of the set values of the parameters below is “0”, an operation trips due to homing error protection (error code No. 68) and stops according to an operation at alarm occurrence.
   - 16.Pr30 (Homing speed (high))
   - 16.Pr31 (Homing speed (low))
   - 16.Pr33 (Homing acceleration setting)
   - 16.Pr34 (Homing deceleration setting)
2) Also, if the over-travel inhibit input is enabled in an operating direction under any of the conditions below during homing, an operation trips due to homing error protection (error code No. 68) and stops according to an operation at alarm occurrence.
   - A limit sensor in a traveling direction has been detected during detection of specified count of Z phase How to decelerate at the detection of a limit sensor depends on the settings of SV.Pr55 (Over-travel inhibit input operation setting). (For a set value = 0 or 2, deceleration-and-stop. For a set value = 1 or 3, stop in the deceleration time “0”.)
3) We would like to ask you to design so that a sensor signal does not vary (beyond the sensor signal width) when the motor is decelerating after it detects the limit sensor.
4) We would like to ask you to design so that the Z phase of the motor does not turn on near the Z phase detection start position (L-SPD out of the negative limit sensor area in a figure shown above). The number of Z phase counts may vary.

Limit Sensor

Example: An operation in a positive direction

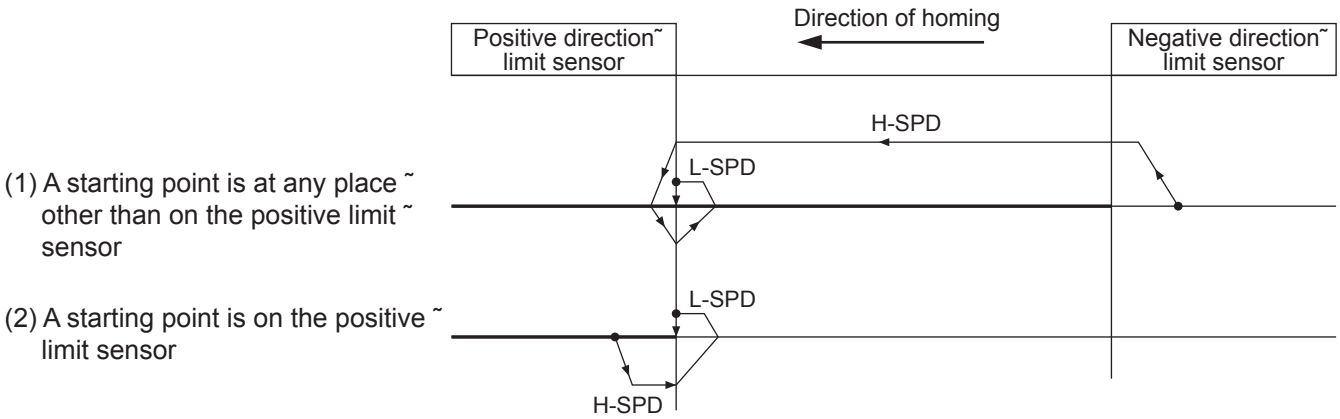

Detect the limit sensor in a direction of homing by 16.Pr30 (Homing speed (high)), decelerate and stop. After that, get out of the limit sensor area once, detect the limit sensor turning off by 16.Pr31 (Homing speed (low)) and define that point as a home position.

• Parameters related to this operation

Parameter number		Description
˜ ˜ ˜ ˜ ˜ 16.Pr**˜ ˜ ˜ ˜ ˜	30˜	Specify the high speed for the homing operation (0 to 6000 r/min).˜
	31˜	Specify the low speed for the homing operation (0 to 6000 r/min).˜
	32˜	Specify the offset operation speed if the home offset operation is performed (0 to 6000 r/min). For the home offset operation, refer to page 124.˜
	33˜	Specify the acceleration for the homing operation in a range between 0 to 3000 r/min.˜
	34˜	Specify the deceleration for the homing operation in a range between 3000 to 0 r/min.˜
	35˜	Specify an operating direction for the homing. (0: positive direction, 1: negative direction)˜
	36˜	Specify a type of homing. ([4]: Limit sensor)˜
	37˜	Specify whether or not to perform the home offset operation. (0: Not perform, 1: Perform) For the home offset operation, refer to page 124.˜
32.Pr**	01	Specify the home offset (–2147483647 to 2147483647 pulses). If the home offset is not required, specify “0”.

Caution

1) If any of the set values of the parameters below is “0”, an operation trips due to homing error protection (error code No. 68) and stops according to an operation at alarm occurrence.
   - 16.Pr30 (Homing speed (high))
   - 16.Pr31 (Homing speed (low))
   - 16.Pr33 (Homing acceleration setting)
   - 16.Pr34 (Homing deceleration setting)
2) Also, if the over-travel inhibit input is enabled in an operating direction under any of the conditions below during homing, an operation trips due to homing error protection (error code No. 68) and stops according to an operation at alarm occurrence.
   - After the reversal due to detection of a limit sensor in a direction of homing, a limit sensor in the reverse direction, not in a direction of homing, has been detected.
     How to decelerate at the detection of a limit sensor depends on the settings of SV.Pr55 (Over-travel inhibit input operation setting). (For a set value = 0 or 2, deceleration-and-stop. For a set value = 1 or 3, stop in the deceleration time “0”.)
3) We would like to ask you to design so that a sensor signal does not vary (beyond the sensor signal width) when the motor is decelerating after it detects the limit sensor.
4) In this system, delay time of a maximum of 2 ms is caused when detecting the limit sensor at the • part and, therefore, the home position varies to the extent of a maximum of homing speed (low) multiplied by 2 (ms).

Homing Operation

Z Phase Homing

Example: Z phase count = 3 at an operation in a positive direction

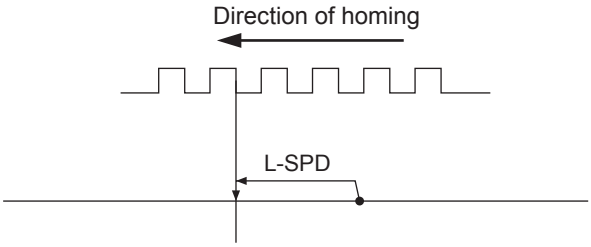

Count the Z phase specified times by 16.Pr3B (homing Z phase count setting) while moving in a direction of homing according to 16.Pr31 (Homing speed (low)) and define that point as a home position.

• Parameters related to this operation

Parameter number		Description
˜ ˜ ˜ ˜ ˜ 16.Pr**˜ ˜ ˜ ˜ ˜	31˜	Specify the low speed for the homing operation (0 to 6000 r/min).˜
	32˜	Specify the offset operation speed if the home offset operation is performed (0 to 6000 r/min). For the home offset operation, refer to page 124.˜
	33˜	Specify the acceleration for the homing operation in a range between 0 to 3000 r/min.˜
	34˜	Specify the deceleration for the homing operation in a range between 3000 to 0 r/min.˜
	35˜	Specify an operating direction for the homing. (0: positive direction, 1: negative direction)˜
	36˜	Specify a type of homing. ([5]: Z phase homing)˜
	37˜	Specify whether or not to perform the home offset operation. (0: Not perform, 1: Perform) For the home offset operation, refer to page 124.˜
	3B˜	Specify the Z phase that an operation stops. ([3] (the 3rd Z phase) in this example)˜
32.Pr**	01	Specify the home offset (–2147483647 to 2147483647 pulses). If the home offset is not required, specify “0”.

Caution

1) If any of the set values of the parameters below is “0”, an operation trips due to homing error protection (error code No. 68) and stops according to an operation at alarm occurrence.
   - 16.Pr31 (Homing speed (low))
   - 16.Pr33 (Homing acceleration setting)
   - 16.Pr34 (Homing deceleration setting)
2) Also, if the over-travel inhibit input is enabled in an operating direction under any of the conditions below during homing, an operation trips due to homing error protection (error code No. 68) and stops according to an operation at alarm occurrence.
   - A limit sensor in a traveling direction has been detected during detection of specified count of Z phase How to decelerate at the detection of a limit sensor depends on the settings of SV.Pr55 (Over-travel inhibit input operation setting). (For a set value = 0 or 2, deceleration-and-stop. For a set value = 1 or 3, stop in the deceleration time “0”.)
3) If a start position of homing is near the Z phase output position, the number of Z phase counts may vary.

Bumping Homing

Example: An operation in a positive direction

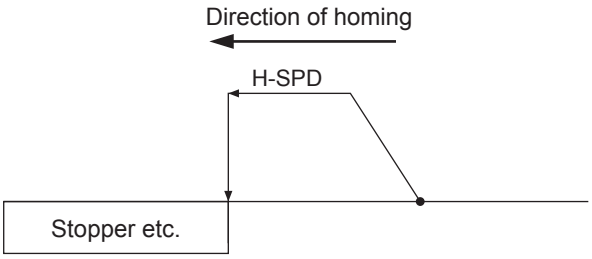

The motor moves in a direction of homing according to 16.Pr30 (Homing speed (high)). During the homing, the motor output torque limit becomes 16.Pr3A (Torque limit for bumping homing). When the state the motor output torque is limited by the hit & stop torque limit has been kept for a period specified by 16.Pr39 (Bumping detection time), define that point as a home position

• Parameters related to this operation

Parameter number		Description
~ ~ ~ ~ ~ 16.Pr**~ ~ ~ ~ ~ ~	30~	Specify the high speed for the homing operation (0 to 6000 r/min).~
	32~	Specify the offset operation speed if the home offset operation is performed (0 to 6000 r/min). For the home offset operation, refer to page 124.~
	33~	Specify the acceleration for the homing operation in a range between 0 to 3000 r/min.~
	34~	Specify the deceleration for the homing operation in a range between 3000 to 0 r/min.~
	35~	Specify an operating direction for the homing. (0: positive direction, 1: negative direction)~
	36~	Specify a type of homing. ([6]: Bumping Homing)~
	37~	Specify whether or not to perform the home offset operation. (0: Not perform, 1: Perform) For the home offset operation, refer to page 124.~
	39~	Specify the bumping detection time (0 to 10000 ms).~
	3A~	Specify the torque limit for the bumping homing (0 to 100%).~
32.Pr**	01	Specify the home offset (–2147483647 to 2147483647 pulses). If the home offset is not required, specify “0”.

Caution

1) If any of the set values of the parameters below is “0”, an operation trips due to homing error protection (error code No. 68) and stops according to an operation at alarm occurrence.
   - 16.Pr30 (Homing speed (high))
   - 16.Pr33 (Homing acceleration setting)
   - 16.Pr34 (Homing deceleration setting)
2) Also, if the over-travel inhibit input is enabled in an operating direction under any of the conditions below during homing, an operation trips due to homing error protection (error code No. 68) and stops according to an operation at alarm occurrence.
   - A limit sensor has turned on at the startup.
   - A limit sensor in a traveling direction has been detected during detection of bumping.
     How to decelerate at the detection of a limit sensor depends on the settings of SV.Pr55 (Over-travel inhibit input operation setting). (For a set value = 0 or 2, deceleration-and-stop. For a set value = 1 or 3, stop in the deceleration time “0”.)
3) If a set value of 16.Pr39 (Bumping detection time) and 16.Pr3A (Torque limit for bumping homing) is small, the bumping may not be detected exactly.

Data Set

Example:

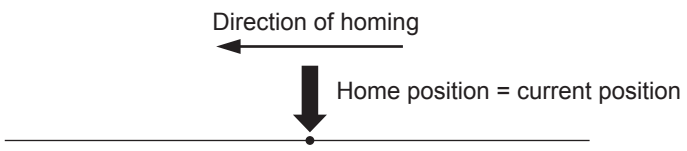

A current position is defined as a home position. If the motor is moved to any position by JOG and homing of data set system is executed, that place is defined as a home position and the homing is completed.

• Parameters related to this operation

Parameter number		Description
~ ~ ~ ~ ~ 16.Pr**~ ~ ~ ~	32~	Specify the offset operation speed if the home offset operation is performed (0 to 6000 r/min). For the home offset operation, refer to page 124.~
	33~	Specify the acceleration for the homing operation in a range between 0 to 3000 r/min. (This is required only when performing an offset operation.)~
	34~	Specify the deceleration for the homing operation in a range between 3000 to 0 r/min. (This is required only when performing an offset operation.)~
	36~	Specify a type of homing. ([7]: Data set)~
	37~	Specify whether or not to perform the home offset operation. (0: Not perform, 1: Perform) For the home offset operation, refer to page 124.~
32.Pr**	01	Specify the home offset (–2147483647 to 2147483647 pulses). If the home offset is not required, specify “0”.

Homing Operation

Homing Offset Operation

The home offset at the completion of homing can be specified by 32.Pr00 (Home offset). Specify the travel from a machine home position (homing completion position) to the “0” position as the home offset.

- 16.Pr37 (Home complete type) is set to “0”
  The motor stops at the machine home position when the homing has completed and, at the same time, a command position is set to [- home offset].
- 16.Pr37 (Home complete type) is set to “1”
  After the motor stops at a machine home position, preset a command position = [- home offset]. Then, perform a step operation for the home offset at a speed specified by 16.Pr32 (Homing offset speed). In this case, the command position after the home offset operation completes becomes “0”

Caution

1) If 16.Pr32 (Homing offset speed), 16.Pr33 (Homing acceleration setting) and 16.Pr34 (Homing deceleration setting) are “0”, an operation trips due to the error code No. 69 (undefined data error protection) and stops according to an operation at alarm occurrence.
2) Do not set [- home offset] out of a maximum travel limit range. The error code No. 72 (maximum travel limit error protection) may be shown.
3) Set the home offset appropriately so that a position of [command position = 0] is not in the over-travel inhibit input range. The home offset may not be completed.

*** Example of homing offset**

• Homing offset is set to “ +5000”

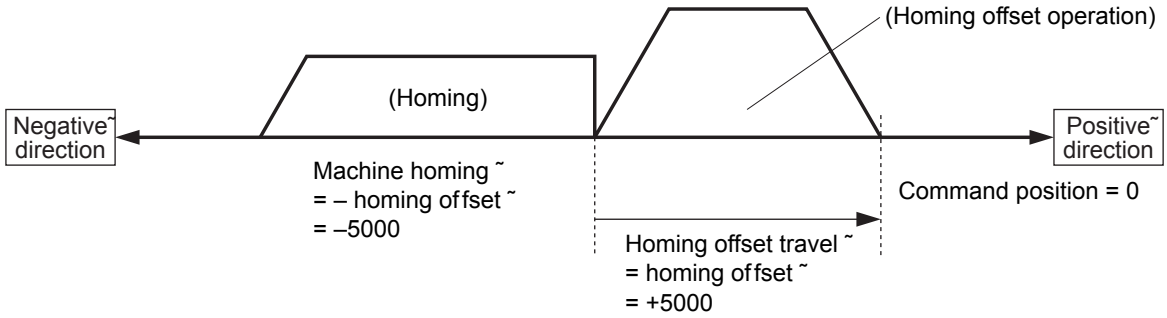

• Timing chart

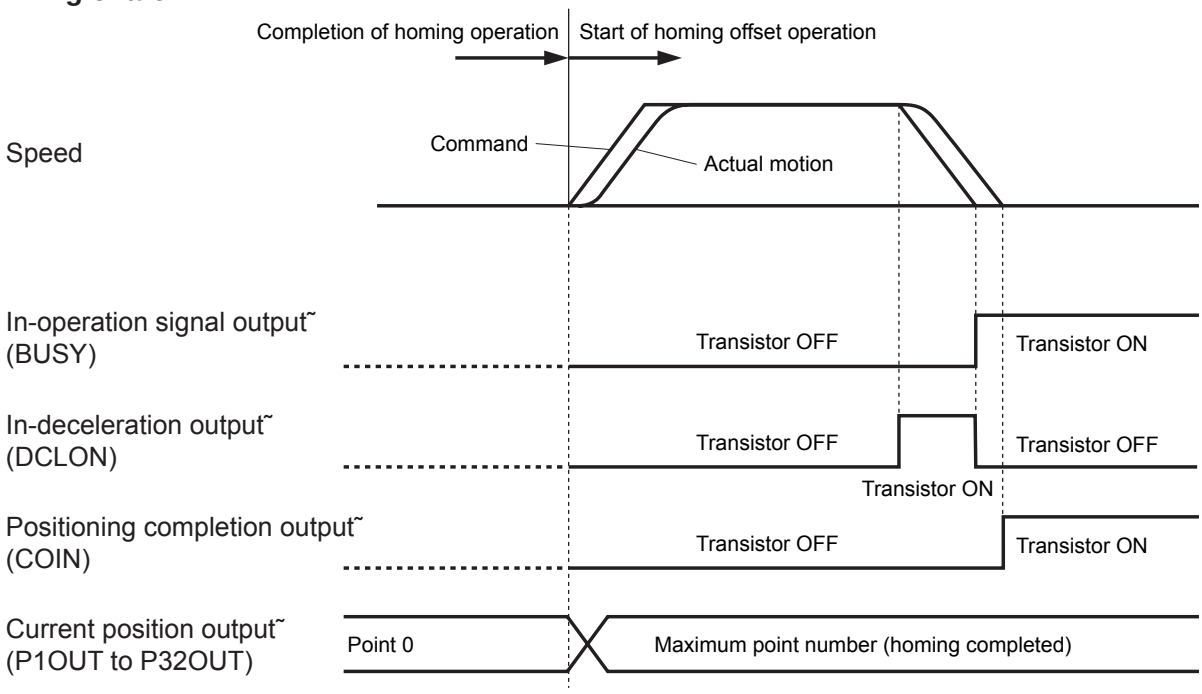

Emergency Stop Operation/Deceleration-and-Stop Operation

An active operation can be interrupted and canceled.

Emergency stop : An operation stops in a deceleration time specified by a special parameter.

Deceleration-and-stop : An operation stops in a deceleration time specified in an operation mode before the start of deceleration.

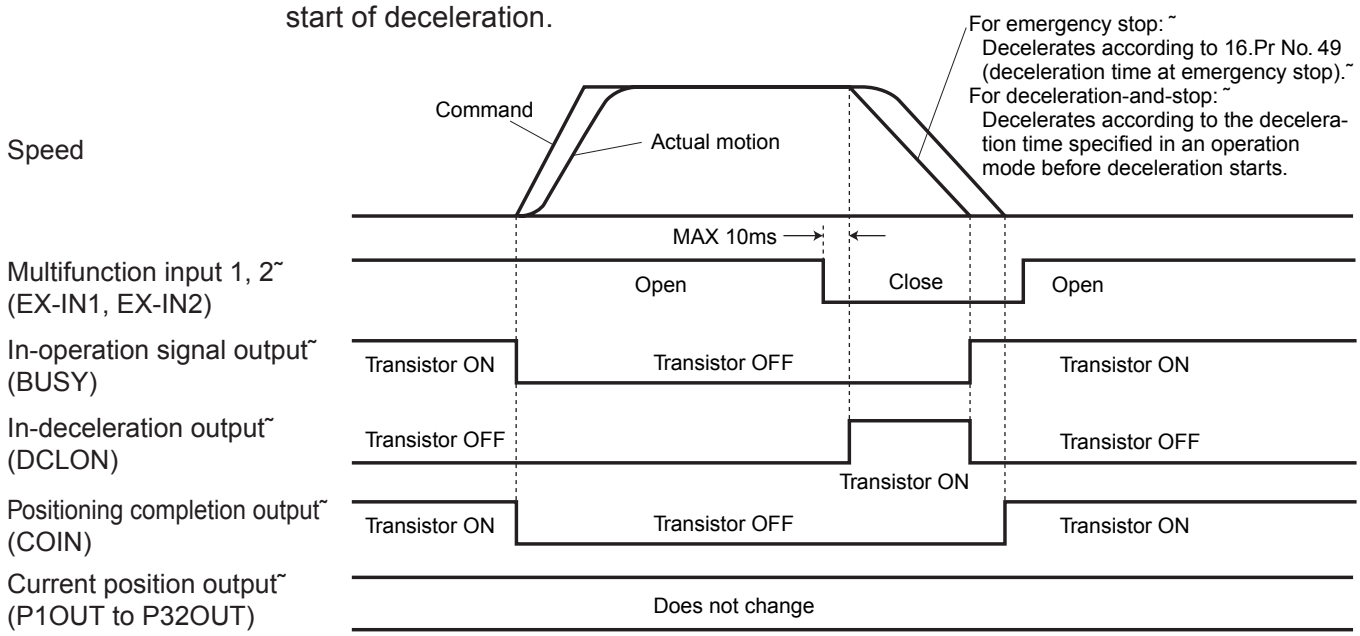

Procedure		Description
(1)˜	Assignment of emergency stop/deceleration-and-stop˜	Assign the emergency stop or deceleration-and-stop to the multifunction input 1 (EX-IN1: CN X5 Pin 22) or multifunction input 2 (EX-IN2: CN X5 Pin 25) by SV.Pr5A (multi function input 1 signal selection) or SV.Pr5C (multi function input 2 signal selection).˜
(2)˜	Start of emergency stop/deceleration-and-stop˜	By connecting (closing) the open multi function input 1/2, to which the emergency stop or deceleration-and-stop is assigned, into COM– when the motor is running, an active operation is canceled and a stop operation starts. The signal logic can be changed by SV.Pr59 (multi function input 1 signal logic) or SV.Pr5B (multi function input 2 signal logic).˜ • For emergency stop: An operation decelerates according to 16.Pr49 (deceleration time at emergency stop). If a set value is "0", an operation stop in the deceleration time "0".˜ • For deceleration-and-stop: An operation stops in a deceleration time specified in an operation mode at the start of deceleration.˜
(3)	Stop confirmation	When a stop operation has completed, a transistor of the in-operation signal output (BUSY: CN X5 Pin 28) turns ON again. Then, the current position output (P1OUT to P32OUT: CN X5 Pin 29, 30, 31, 32, 33 and 34) keeps the state before the deceleration.

* Positioning completion output/in-deceleration output (COIN/DCLON: CN X5 Pin 27)
In SV.Pr64 (output signal selection), you can select COIN or DCLON to be output. For the timing of turning the transistor ON/OFF, refer to the diagram above.

Caution

1) Even if the multifunction input 1/2 (EX-IN1/EX-IN2) is returned to the OPEN state, the deceleration is not canceled and the stop operation continues. Return the multi function input to the previous state after the emergency stop or deceleration-and-stop, specify a point just like as a normal step operation and connect (close) the open strobe signal input (STB: CN X5 Pin 24) to COM–. Then, movement to the point starts.
2) When you input a stop signal during a homing operation, retry the homing operation from the beginning.
3) If the emergency stop and deceleration-and-stop are assigned to the multifunction input 1 and 2 (EX-IN1 and EX-IN2), respectively, and those are input simultaneously, the higher priority is given to the emergency stop.
4) If the emergency stop is input during deceleration by the deceleration-and-stop, an operation stops in the deceleration time "0".
5) When the emergency stop or deceleration-and-stop is input, the start of step operation, jog operation and homing operation (strobe signal input (STB) ON) is ignored.

Temporary Stop Operation

Temporary Stop Operation

An active operation can be stopped temporarily and restarted.

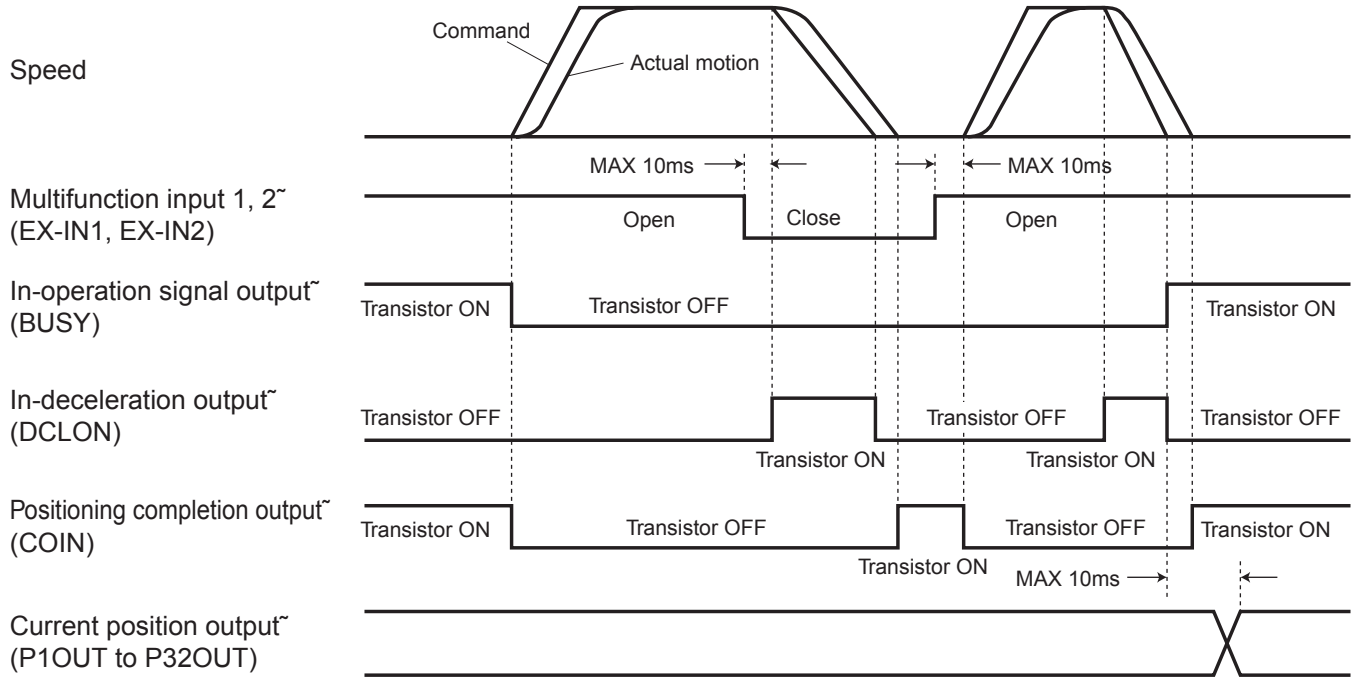

Procedure	Description
(1)˜ Assignment of temporary stop˜	Assign the temporary stop to the multi function input 1 (EX-IN1: CN X5 Pin 22) or multi function input 2 (EX-IN2: CN X5 Pin 25) by SV.Pr5A (multi function input 1 signal selection) or SV.Pr5C (multi function input 2 signal selection).˜
(2)˜ Start of temporary stop˜	By connecting (closing) the open multi function input 1 or multi function input 2, to which the temporary stop is assigned, into COM- when the motor is running, an active operation is stopped temporarily. Then, the deceleration operation complies with the settings specified in an operation mode at the start of deceleration.˜
(3)˜ Check of stop by temporary stop˜	Even if the stop operation is completed, a transistor of the in-operation signal output (BUSY: CN X5 Pin 28) remains OFF. Therefore, if the stop must be checked, check it with the positioning completion output (COIN: CN X5 Pin 27).˜
(4) Cancellation of temporary stop and restart of operation	An operation can be restarted by opening again the multi function input 1 or multi function input 2 to which the temporary stop is assigned. After the restart, check the completion of operation etc. in the same procedure as a step operation.

* Positioning completion output/in-deceleration output (COIN/DCLON: CN X5 Pin 27)
In SV.Pr64 (output signal selection), you can select COIN or DCLON to be output. For the timing of tuning the transistor ON/OFF, refer to the diagram above.

Caution

1) The temporary stop operation is enabled only for the step operation. The temporary stop operation works like the deceleration-and-stop for the jog operation and homing operation and any operation before the temporary operation is canceled.
2) When you input a temporary stop signal during a homing operation, retry the homing operation from the beginning.
3) If the emergency stop or deceleration-and-stop is input during the temporary stop, the temporary stop is terminated forcibly. An operation cannot be restarted even if the input of the temporary stop is canceled.
4) If the emergency stop is input during deceleration by the temporary stop, an operation stops in the deceleration time “0”.
5) If the temporary stop is input and the temporary stop is canceled during the motor deceleration, an operation stops once and then restarts.
6) If the temporary stop is input at the start of step operation command, the step operation is held although the command is accepted. After that, the step operation which was held starts when the temporary stop has been canceled. The start (strobe signal input (STB) ON) of the jog operation/homing operation in temporary stop is ignored.

Block Operation

Overview of Block Operation

This servo driver can perform the two types of block operations, i.e., continuous block operation and combined block operation. These operations can be switched by 16.Pr54 (block operation type setting).

Continuous block operation : Several step operations can be performed continuously. Once an operation starts, the operation continues to a specified point number.

Combined block operation : A step operation is performed according to combined several point numbers. This is useful when you want to change the speed during a step operation.

16.Pr54 (block operation type setting)	Description
0	Continuous block operation
1	Combined block operation

Continuous Block Operation

If 16.Pr54 (block operation type setting) is “0” (continuous block operation) and the block setting of the point number specified by point specifying input (P1IN to P32IN: CN X5 Pin 3, 4, 5, 6, 7 and 8) is “Block”, the step operation is performed continuously in order from the specified point number to the block number of “Single” block setting.

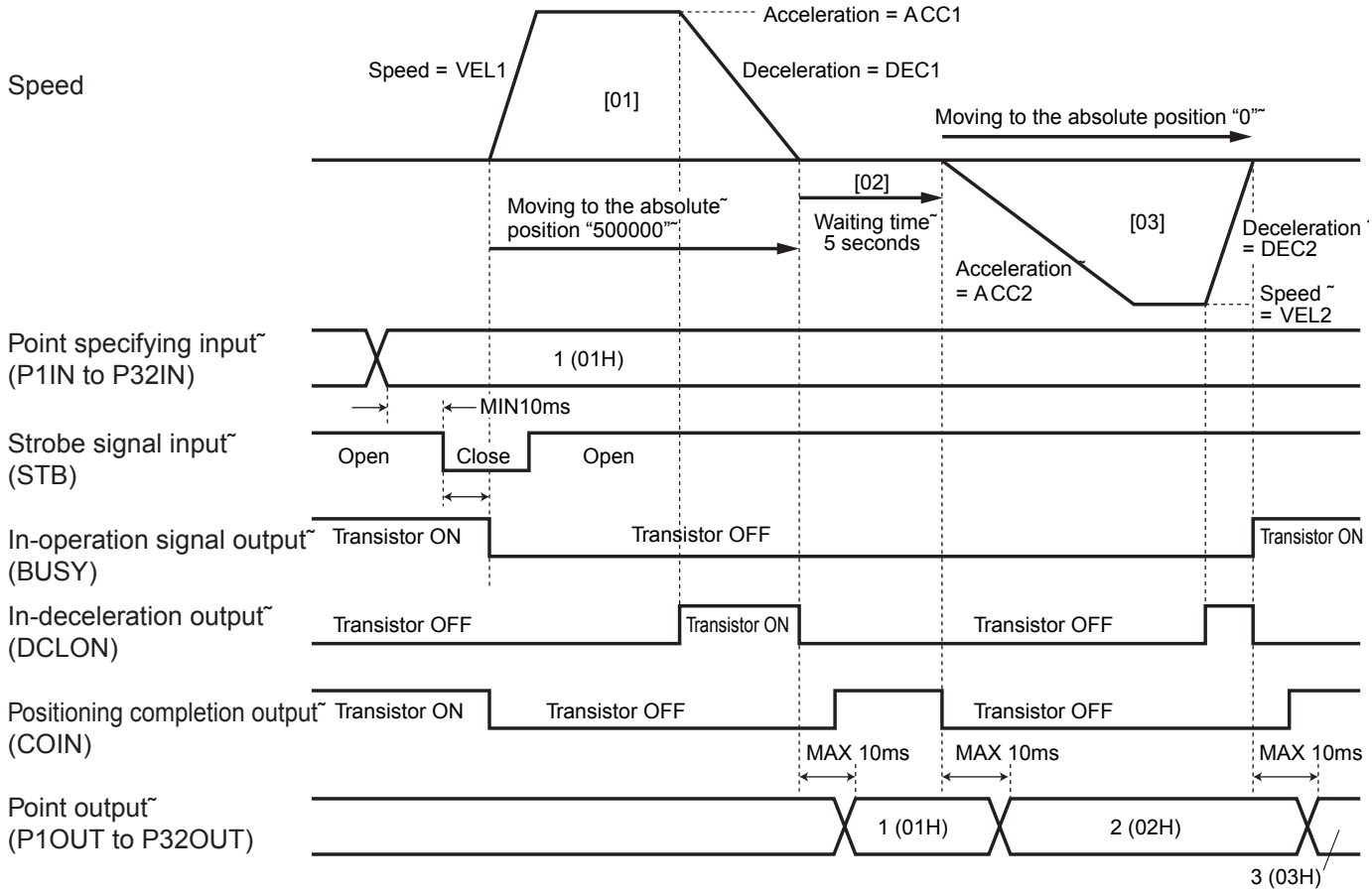

Continuous block operation procedure (example)

1. Set a 16-bit positioning parameter and step parameter. (Refer to “Parameters Used in this Operation Example” on page 128.)
2. Execute the homing. (Refer to “Homing Operation” on page 114.)
3. Specify the point 1 when the servo turns on and input the strobe signal input (STB: CN X5 Pin 24). Then, an operation is performed continuously, e.g., [01] → [02] → [03].

Block Operation

- **Parameters Used in this Operation Example**

16-bit positioning parameter

16.Pr**	Symbol in diagram	Description
54˜	–˜	Specify a type of block operation. ([0] for the continuous block operation)˜
01˜	VEL1˜	Specify the first speed (0 to 6000 r/min)˜
02˜	VEL2˜	Specify the second speed (0 to 6000 r/min)˜
10˜ ˜	ACC1˜ ˜	Specify the first acceleration speed (0 to 10000 ms)˜ Specify in the acceleration speed in a range between 0 and 3000 r/min.˜
14˜ ˜	ACC2˜ ˜	Specify the second acceleration speed (0 to 10000 ms)˜ Specify in the acceleration speed in a range between 0 and 3000 r/min.˜
12˜ ˜	DEC1˜ ˜	Specify the first deceleration speed (0 to 10000 ms)˜ Specify in the deceleration speed in a range between 3000 and 0 r/min.˜
16	DEC2	Specify the second deceleration speed (0 to 10000 ms)˜ Specify in the deceleration speed in a range between 3000 and 0 r/min.

Step parameter

ST.Pr**	Operation mode	Position/Waiting time	Speed	Acceleration	Deceleration	Block
01˜	Absolute operation (Absolute)˜	500000˜	VEL1˜	ACC1˜	DEC1˜	Block˜
02˜	Dwell timer operation (Dwell time)˜	500˜	VEL1˜	ACC1˜	DEC1˜	Block˜
03	Absolute operation (Absolute)	0	VEL2	ACC2	DEC2	Single

Caution

1) A maximum point number (specified by the settings of SV.Pr57 (selection of number of input points)) is treated as the “Single” operation, regardless of the block setting.
2) The change into the last point number (point “10” in this example) of the in-operation signal output (BUSY: CN X5 Pin 28) and the current position output (P1OUT to P32OUT: CN X5 Pin 29, 30, 31, 32, 33 and 34) is made only when the last step operation of the continuous block operation has completed and the strobe signal input (STB: CN X5 Pin 24) is in the OPEN state. Be sure to make the strobe signal input (STB) open after the in-operation signal output (BUSY) turns OFF.

Combined Block Operation

If the block setting of a point number specified by the point specifying input (P1IN to P32IN: CN X5 Pin 3, 4, 5, 6, 7 and 8) is “Block” when 16.Pr54 (block operation type setting) is “1” (combined block operation), the operation which consists of combined step operations from a specified point number to the “Single” point number specified by the block setting.

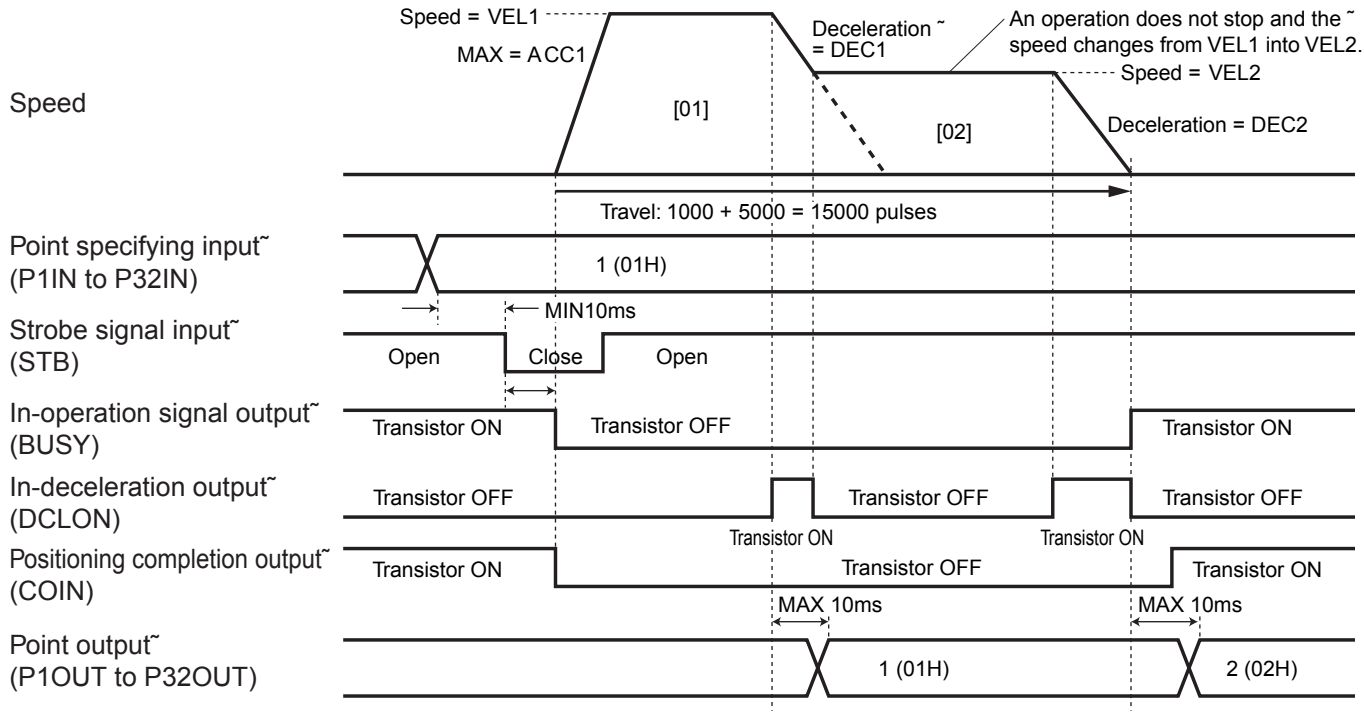

Combined block operation procedure (example)

1. Set a 16-bit positioning parameter and step parameter. (Refer to “Parameters Used in this Operation Example” below.)
2. Execute the homing. (Refer to “Homing Operation” on page 114.)
3. Specify the point 1 when the servo turns on and input the strobe signal input (STB: CN X5 Pin 24). Then, an operation is performed without stopping, e.g., [01] >– [02].

• Parameters Used in this Operation Example

16-bit positioning parameter

16.Pr**	Symbol in diagram	Description
54˜	–˜	Specify a type of block operation. ([1] for the combined block operation)˜
01˜	VEL1˜	Specify the first speed. (0 to 6000 r/min)˜
02˜	VEL2˜	Specify the second speed. (0 to 6000 r/min)˜
˜ 10˜ ˜	˜ ACC1˜ ˜	Specify the acceleration speed. (0 to 10000 ms)˜ Specify in the acceleration speed in a range between 0 and 3000 r/min.˜ The acceleration speed at the combined points must be all the same.˜
˜ 12	˜ DEC1	Specify the deceleration speed. (0 to 10000 ms)˜ Specify in the deceleration speed in a range between 3000 and 0 r/min.˜ The deceleration speed at the combined points must be all the same.

Step parameter

ST.Pr**	Operation mode	Position/Waiting time	Speed	Acceleration	Deceleration	Block
01˜	Incremental operation (Incremental)˜	10000˜	VEL1˜	ACC1˜	DEC1˜	Block˜
02	Incremental operation (Incremental)	5000	VEL2	ACC1	DEC1	Single

Caution

1) A combined operation up to a maximum point number (specified by the settings of SV.Pr57 (selection of number of input points)) available as a step operation can be performed. However, the maximum point number is treated as the “Single” operation, regardless of the block setting.
2) If the block setting of the next point number is “Dwell time”, an operation works like the continuous block operation (refer to page 127).
3) Do not specify “Rotary” as an operation mode. The combined block operation is unavailable in the rotary axis operation.
4) During the combined block operation, the linear acceleration/deceleration only is enabled and the S-shaped acceleration/deceleration is ignored. The deceleration speed at the combined points must be all the same.
5) If a step operation in a reverse traveling direction is defined as a combined block operation by the “Block” designation, the motor moves to the first point by step, stops once, moves back and then starts an operation to the next point.
6) The change into the last point number (point “10” in this example) of the in-operation signal output (BUSY: CN X5 Pin 28) and the current position output (P1OUT to P32OUT: CN X5 Pin 29, 30, 31, 32, 33 and 34) is made only when the last step operation of the combined block operation has completed and the strobe signal input (STB: CN X5 Pin 24) is in the OPEN state. Be sure to make the strobe signal input (STB) open after the in-operation signal output (BUSY) turns OFF.

Sequential Operation

Sequential Operation

The sequential operation can be performed by setting 16.Pr52 (sequential operation setting) to “1”. When the sequential operation is set, execute a step operation by incrementing a point number by 1 at every inputting the strobe signal input (STB: CN X5 Pin 24) when the servo turns on, not using the point specifying input (P1IN to P32IN: CN X5 Pin 3, 4, 5, 6, 7 and 8).

• Homing operation at sequential operation

1) 16.Pr38 (homing disabling setting) is “0” (homing required) and an operation mode is not the absolute mode (SV.Pr0B (absolute encoder setting) is “1”).
   => Homing is executed by the first strobe signal input (STB) after the power supply turns on.
   A sequential operation is performed beginning with the point 1 after the next strobe signal.
2) 16.Pr38 (homing disabling setting) is “1” (homing not required) and an operation mode is the absolute mode (SV.Pr0B (absolute encoder setting) is “0” or “2”).
   => A sequential operation is performed beginning with the point 1 when the first strobe signal is input, because homing is not required.

A maximum point number of the sequential operation can be set by 16.Pr53 (a maximum point number of sequential operation). After a step operation of the maximum point number is executed, the operation returns to the point 1. In the sequential operation, the maximum point number can be specified in a range between 1 and 60, because the setting of SV.Pr57 (selection of number of input points) is disabled.

Example of Operation

16.Pr52 (sequential operation setting) = 1 (enabled)
16.Pr53 (a maximum point number of sequential operation) = 3

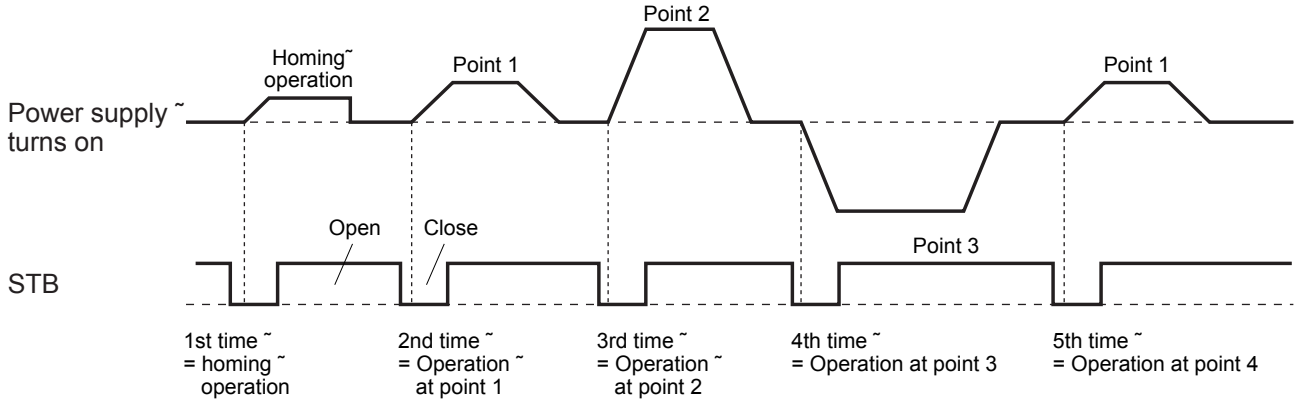

Procedure		Description
(1)	Setting of parameter	Set 16.Pr52 (sequential operation setting) to “1” and necessary positioning parameters to 16.Pr53 (a maximum point number of sequential operation), “homing operation” and “step operation”.
(2)	Power reset	Turn the servo on after the power supply turns on again.
(3)	Execution of homing operation	Close the first open strobe signal input (STB). Then, homing is executed.
(4)	Designation of operation point number	After that, an operation is performed in order at every inputting the strobe signal input (STB), e.g., point 1 –> point 2 –> point 3 –> point 1 –> point 2 –> ...

Caution

1) When setting the sequential operation, an operation command (step operation, homing, jog operation or Alarm Clear) cannot be executed by the point specifying input (P1IN to P32IN). However, the Alarm Clear can be specified by assignment of the multifunction input 1/2 (EX-IN1/EX-IN2: CN X5 Pin 22/25).
2) A block operation is unavailable when the sequential operation is set.

S-shaped Acceleration/Deceleration Function

This servo driver can perform the S-shaped acceleration/deceleration at the acceleration/deceleration. Set the S-shaped acceleration/deceleration in the time to reach the acceleration at the linear acceleration/deceleration in 16-bit positioning parameter “Positioning S-shaped acceleration/deceleration setting 1st to 4th” and “S-shaped acceleration/deceleration at jog operation”.

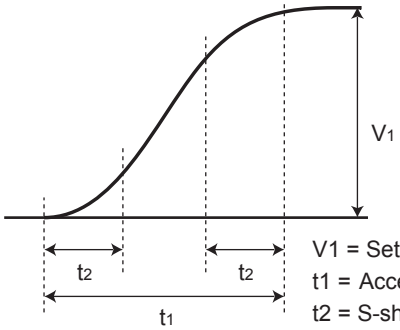

V1 = Set speed (16.Pr00)˜
t1 = Acceleration time˜
t2 = S-shaped acceleration time (16.Pr11)

16-bit positioning parameter “Positioning S-shaped acceleration/deceleration setting 1st to 4th” is for input of a value of acceleration time in a range between 0 and 3000 r/min. So, specify as shown below.˜

<Note>
The examples 1 to 3 below explain the acceleration and apply also to the deceleration.

Example 1:
Linear acceleration (t2 = 0)

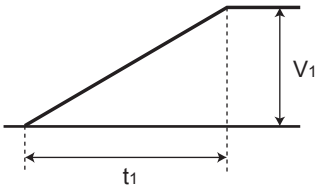

In order to set: V_1˜= 2000r/min˜
t_1˜ = 100ms

$$16.Pr10 = t_1 \times \frac{3000˜}{V_1}$$
$$= 100ms \times \frac{3000˜}{2000}$$
$$= 150ms$$

16.Pr00˜	1st speed˜	2000˜
16.Pr10˜	1st acceleration ˜	150˜
16.Pr11	1st S-shaped acceleration	0

Example 2:
S-shaped section less than 50% (t2 < $\frac{t_1}{2}$)

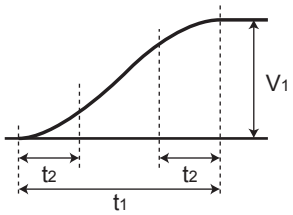

In order to set: V_1˜= 2000r/min˜
t_1˜ = 100ms˜
t_2˜ = 30ms

$$16.Pr10 = (t_1 - t_2) \times \frac{3000˜}{V_1}$$
$$= 70ms \times \frac{3000˜}{2000}$$
$$= 105ms$$

16.Pr00˜	1st speed˜	2000˜
16.Pr10˜	1st acceleration ˜	105˜
16.Pr11	1st S-shaped acceleration	30

Example 3:
S-shaped section 50% (t2 = $\frac{t_1}{2}$)

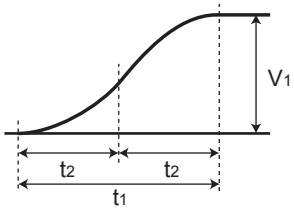

In order to set: V_1˜= 2000r/min˜
t_1˜ = 100ms˜
t_2˜ = 50ms

$$16.Pr10 = (t_1 - t_2) \times \frac{3000˜}{V_1}$$
$$= 50ms \times \frac{3000˜}{2000}$$
$$= 75ms$$

16.Pr00˜	1st speed˜	2000˜
16.Pr10˜	1st acceleration ˜	75˜
16.Pr11	1st S-shaped acceleration	50

Caution

1) Change during a motor step operation applies at the next step operation.
2) When a combined block operation is used (16.Pr54 (Block operation type) = 1), all the operations are performed in the linear acceleration/deceleration, regardless of the S-shaped acceleration/deceleration setting.
3) If the S-shaped acceleration/deceleration setting is “0”, the linear acceleration/deceleration applies.
4) Also if a value of the S-shaped acceleration/deceleration setting is out of an available range, the linear acceleration/deceleration applies.
5) If a deceleration command or travel during the S-shaped acceleration/deceleration is small, smooth S-shaped characteristics may not be obtained.
6) The calculation above shows a theoretical value. Actual S-shaped acceleration/deceleration may cause an error in the setting.

• Available set range of S-shaped acceleration/deceleration (decimals omitted)

2500 p/r encoder	S-shaped acceleration/deceleration setting [ms] ≦ (127950 ÷ acceleration/deceleration setting [ms]) – 1˜
17-bit encoder	S-shaped acceleration/deceleration setting [ms] ≦ (1677066.24 ÷ acceleration/deceleration setting [ms]) – 1

Example of calculation: 2500 p/r encoder
For acceleration/deceleration setting = 1000 [ms], an available set range of S-shaped acceleration/deceleration is:
S-shaped acceleration/deceleration setting [ms] ≦ (127950 ÷ 1000) – 1 ≦ 126.950 [ms]
Therefore, for the S-shaped acceleration/deceleration setting of 127 [ms] or more, the linear acceleration/deceleration is enabled.

Timing Chart

Operation Timing after Power-ON

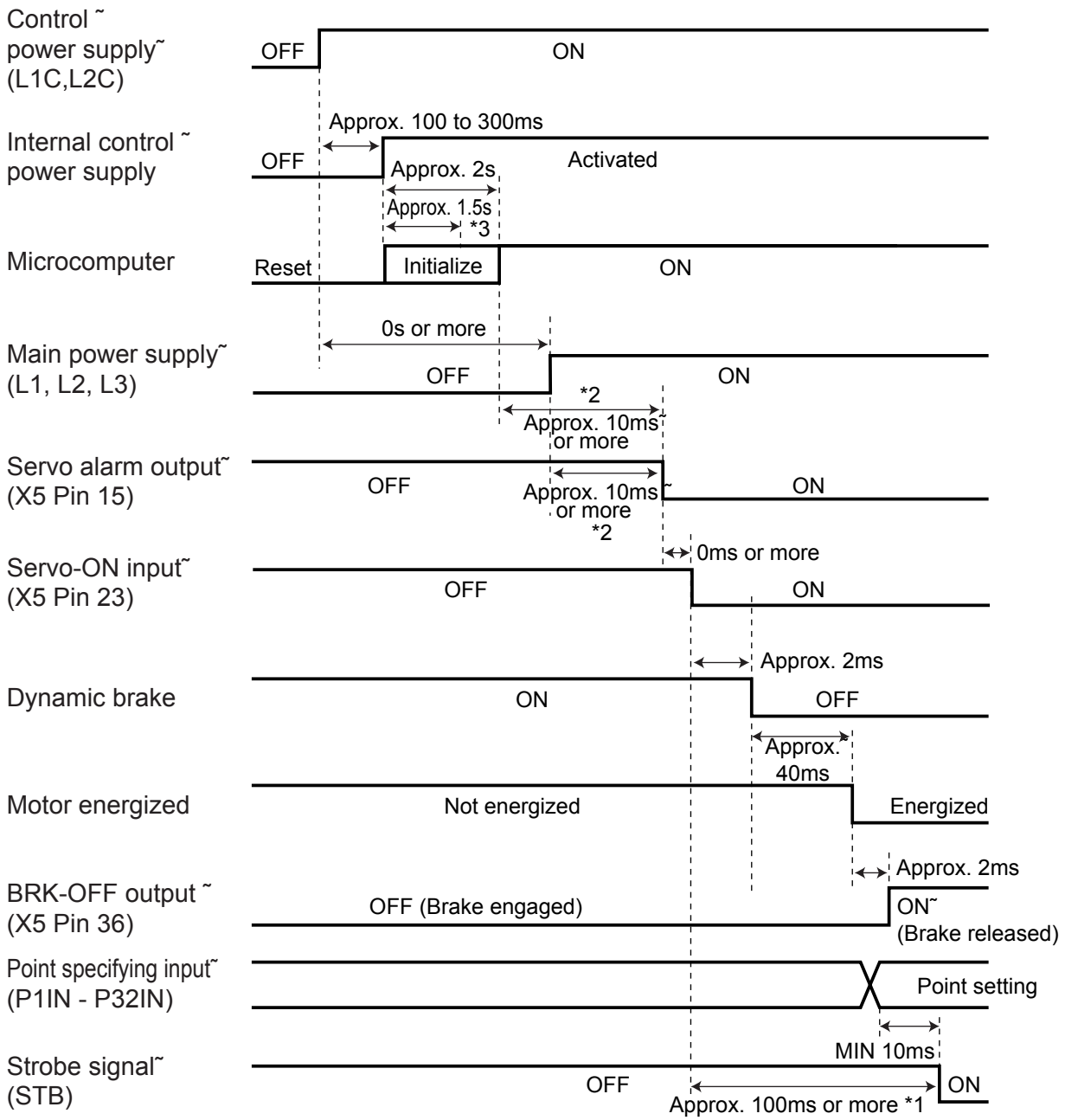

<Notes>

- The above chart shows the timing from AC power-ON to command input.
- Activate the external command input according to the above timing chart.

Caution

*1. In this term Servo-ON input (CN X5 SRV-ON:pin23) turns ON as a hard ware, but operation command can not be received.

*2. Servo alarm output (CN X5 ALM:pin15) turns ON when the microcomputer's initialization is completed, and the condition of no error is occurring. Servo-ON input turns ON after Servo alarm turns ON and the main power supply is activated sufficiently.

*** 3. After Internal control power supply , protective functions are active from approx. 1.5 sec after the start of initializing microcomputer. Please set the signals, especially for protective function, for example over-travel inhibit input (CWL,CCWL) or emergency stop input (EMG-STP), so as to decide their logic until this term.**

When an Error (Alarm) Has Occurred (at Servo-ON Command)

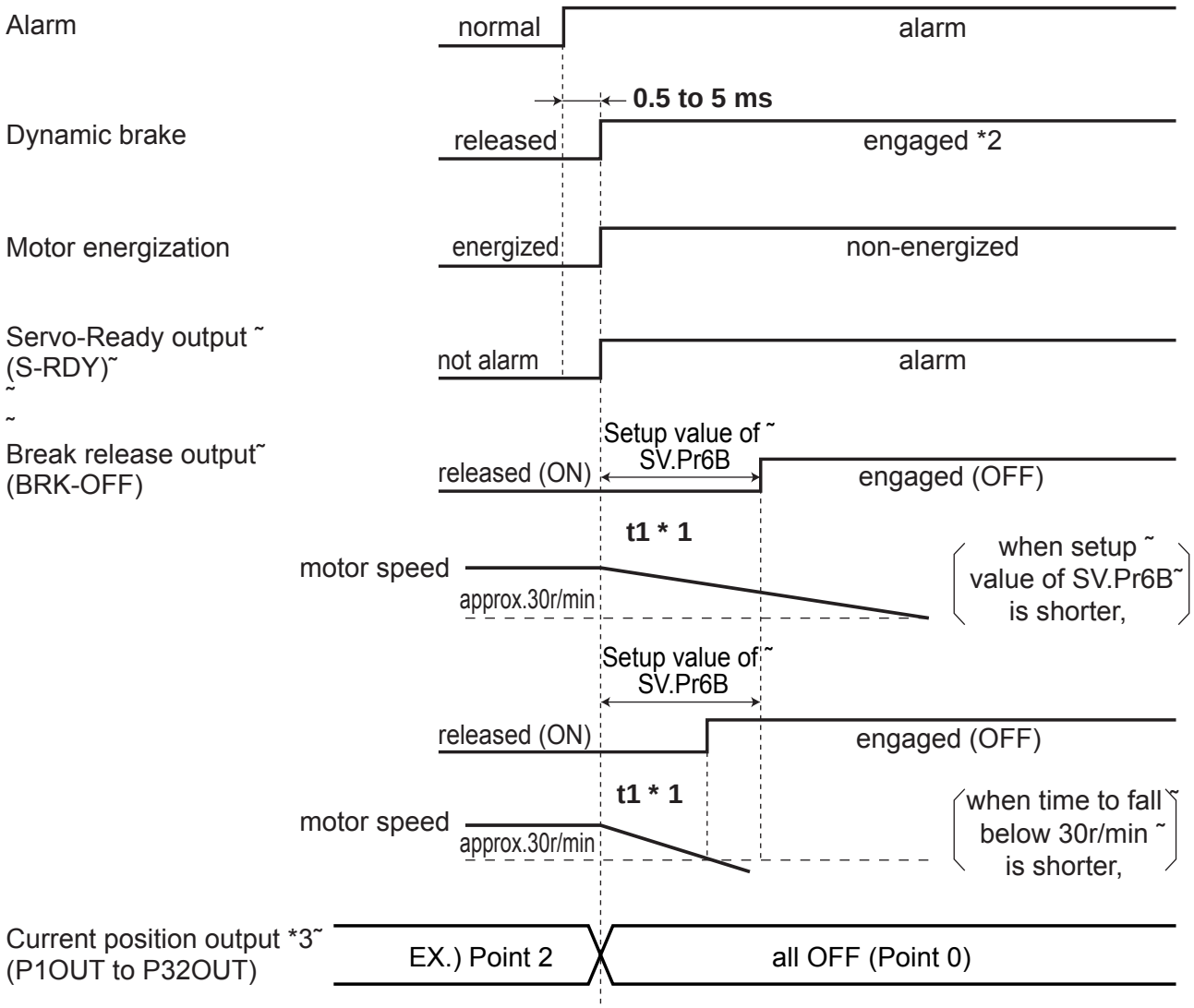

Caution

*1. t1 will be a shorter time of either the setup value of SV.Pr6B or elapsing time for the motor speed to fall below 30r/min.
t1 will be 0 when the motor is in stall regardless of the setup pf SV.Pr6A.

*2. For the action of dynamic brake at alarm occurrence, refer to an explanation of SV.Pr68, "Sequence at alarm ("Parameter setup" at each control mode) as well.

*3. When an alarm has been given, the homing is not completed. So, all the transistors of the current position output (P1OUT to P32OUT: CN X5 Pin 29, 30, 31, 32, 33 and 34) turn OFF (point “0”).

Timing Chart

When an Alarm Has Been Cleared (at Servo-ON Command)

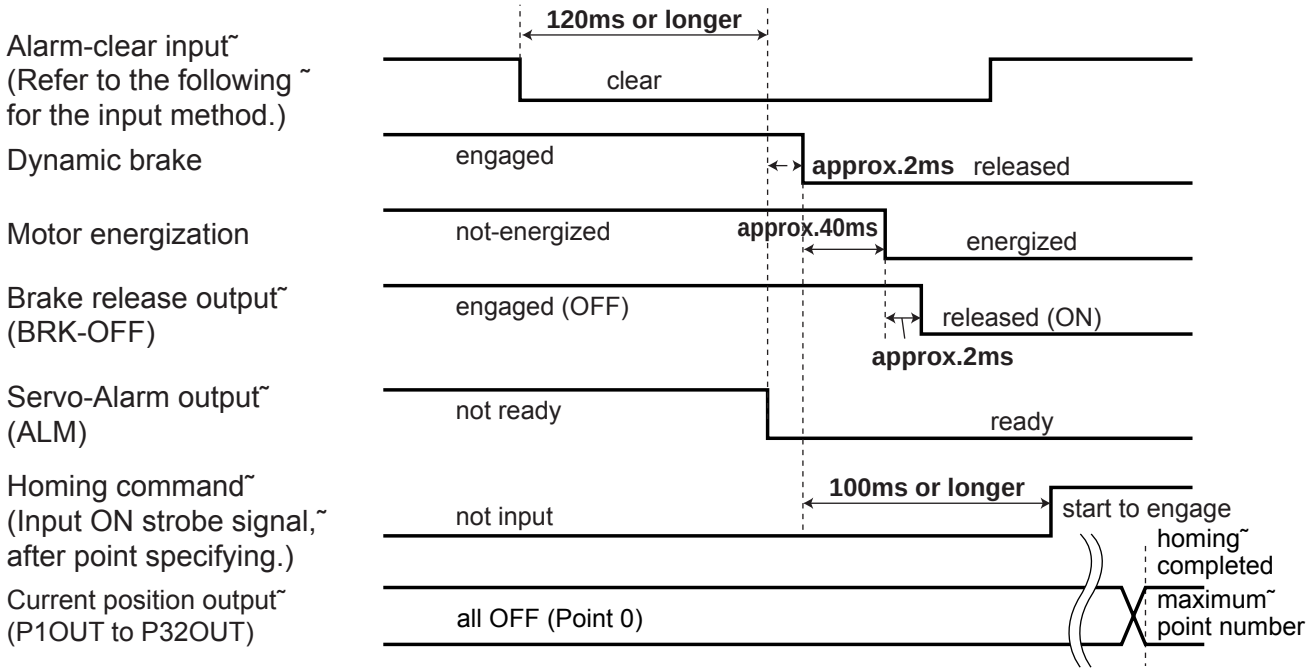

1) Alarm Clear can be input in the two ways below.

1. Point input (P1IN to P32IN: CN X5 Pin 3, 4, 5, 6, 7 and 8)

Specify the point “0” and, when 10 ms or more has passed, enable the strobe signal (STB: CN X5 Pin 24). Alarm Clear is started when the disabled strobe signal input has been enabled.

2. Multi function input (EX-IN1/EX-IN2: CN X5 Pin 22/25)

Assign the Alarm Clear to the multi function input 1 (EX-IN1: CN X5 Pin 22) or multi function input 2 (EX-IN2: CN X5 Pin 25) by SV.Pr5A (multi function input 1 signal selection) or SV.Pr5C (multi function input 2 signal selection) to enable the Alarm Clear.

Alarm Clear is started when the disabled strobe signal input has been enabled.

The signal logic of multi function input can be changed by SV.Pr59 (multi function input 1 signal logic) or SV.Pr5B (multi function input 2 signal logic).

2) The servo driver power supply turns on again after an alarm is cleared.

A step operation can be performed by executing the homing.

When the homing has been completed, a transistor of the current position output (P1OUT to P32OUT: CN X5 Pin 29, 30, 31, 32, 33 and 34) becomes a maximum point number decided by SV.Pr57 (selection of number of input points).

However, in the absolute mode or if the homing is not required, a transistor of the current position output (P1OUT to P32OUT: CN X5 Pin 29, 30, 31, 32, 33 and 34) becomes a maximum point number decided by SV.Pr57 (selection of number of input points) immediately after Alarm Clear and the step operation can be performed.

Servo-ON/OFF Action While the Motor Is at Stall (Servo-Lock)

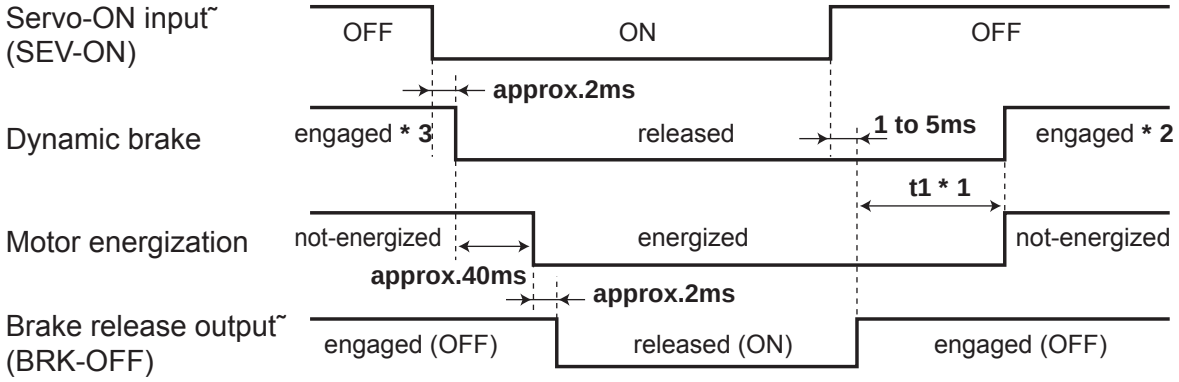

Caution

*1. t1 will be determined by SV.Pr6A setup value.
*2. For the dynamic brake action at Servo-OFF, refer to an explanation of SV.Pr69, "Sequence at Servo-OFF ("Parameter setup" at each control mode) as well.
*3. Servo-ON will not be activated until the motor speed falls below approx. 30r/min.
*4. Once the servo turns off, the current position output (P1OUT to P32OUT: CN X5 Pin 29, 30, 31, 32, 33 and 34) is held to be unchanged until the next point operation is completed.

Servo-ON/OFF Action While the Motor Is in Motion

(Timing at emergency stop or trip. Do not repeat this sequence. During the normal operation, stop the motor, then make Servo-ON/OFF action.)

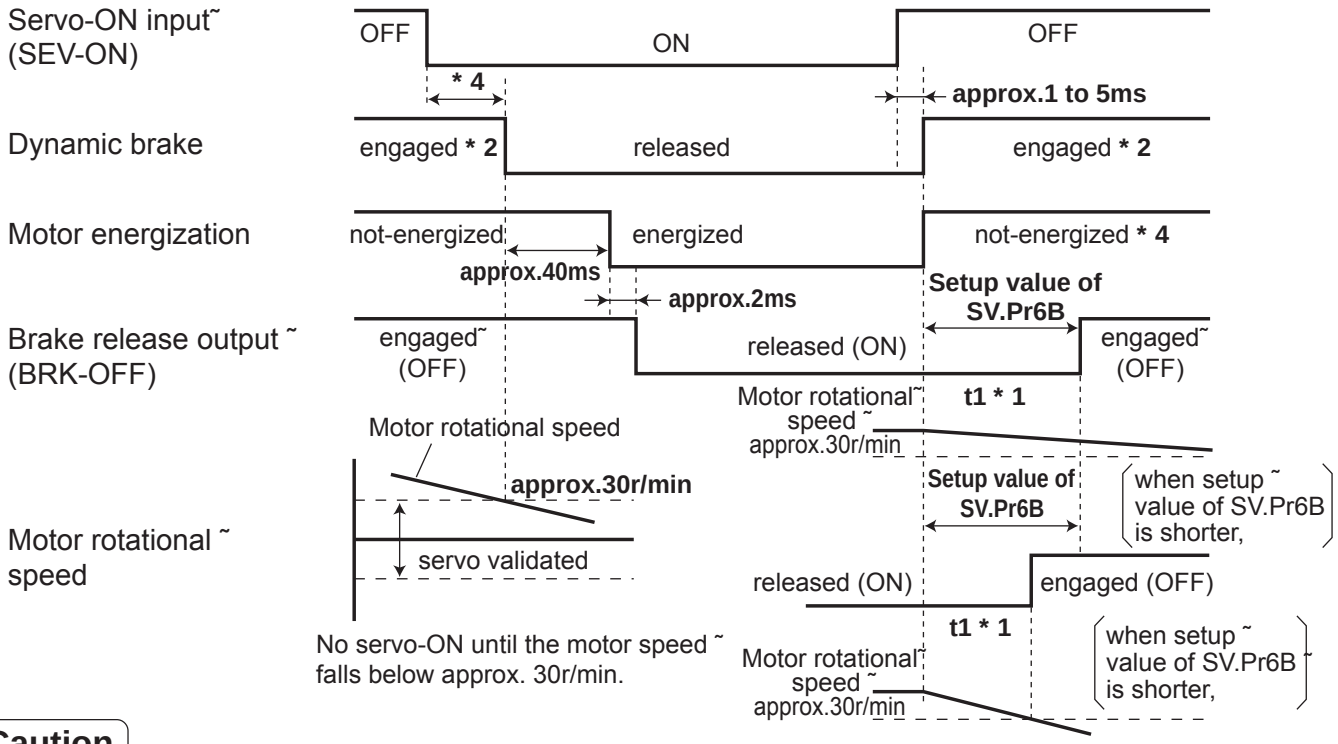

Caution

*1. t1 will be a shorter time of either the setup value of SV.Pr6B or elapsing time for the motor speed to fall below 30r/min.
*2. For a dynamic brake operation during servo off and a motor operation state during deceleration, refer to the explanation of SV.Pr69 (sequence at servo off) also.
*3. For the action of dynamic brake at alarm occurrence, refer to an explanation of Pt69, "Sequence at Servo-OFF ("Parameter setup" at each control mode) as well.
*4. Once the servo turns off, the current position output (P1OUT to P32OUT: CN X5 Pin 29, 30, 31, 32, 33 and 34) is held to be unchanged until the next point operation is completed.

Absolute System

Overview of Absolute System

In a motor of the absolute encoder specifications or absolute/incremental specifications, an absolute system can be constructed by connecting a battery for an absolute encoder and changing the setting of SV.Pr0B (absolute encoder setting) from “1” (default setting) into “0” or “2”. In the absolute system, homing is not required after turning the power supply on.

Configuration of Absolute System

The data of an absolute encoder consists of single-turn data, which output an absolute position always within single turn, and multi-turn data which counts the number of turns. When a battery for the absolute encoder is connected, the multi-turn data can be held even if the power supply turns off. This allow to hold a home position set once, even after the power supply is reset. For the home position setting, “Setup (Initialization) of Absolute Encoder” on page 138.

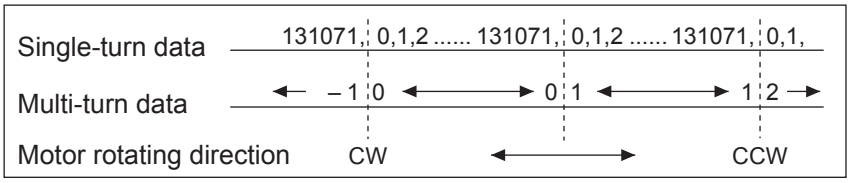

Battery (for Backup) Installation

First Installation of the Battery

After installing and connecting the back-up battery to the motor, execute an absolute encoder setup. Refer to P.138, "Setup (initialization) of Absolute Encoder ".
It is recommended to perform ON/OFF action once a day after installing the battery for refreshing the battery.
A battery error might occur due to voltage delay of the battery if you fail to carry out the battery refreshment.

Replacement of the Battery

It is necessary to replace the battery for absolute encoder when battery alarm occurs.
Replace while turning on the control power. Data stored in the encoder might be lost when you replace the battery while the control power of the driver is off.
After replacing the battery, clear the battery alarm. Refer to P.99, "How to Clear the Battery Alarm".

<Caution>
When you execute the absolute encoder with the console (refer to P.100 of Setting), all of error and multi-turn data will be cleared together with alarm, and you are required to execute “Setup (Initialization) of absolute encoder” (refer to P.138).

How to Replace the Battery

1) Refresh the new battery.
Connector with lead wire of the battery to CN601 and leave of 5 min. Pull out the connector from CN601 5 min after.

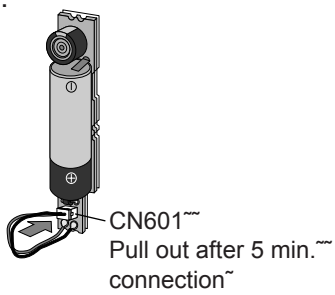

2) Take off the cover of the battery box.

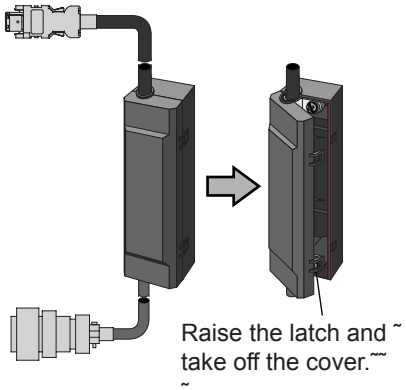

3) Install the battery to the battery box.

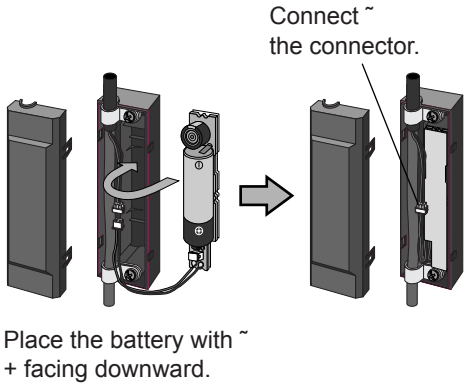

4) Close the cover of the battery box.

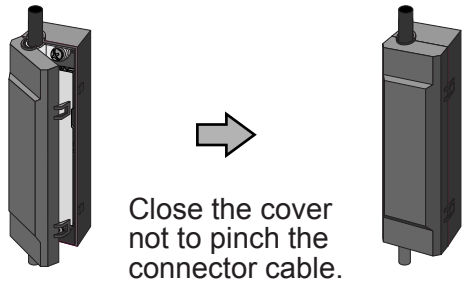

<Caution>
Use the following battery for absolute encoder.
Part No. : DV0P2990 (Lithium battery by Toshiba Battery Co., Ltd. ER6V, 3.6V 2000mAh)

<Cautions>

- Be absolutely sure to follow the precautions below since improper use of the battery can cause electrolyte to leak from the battery, giving rise to trouble where the product may become corroded, and/or the battery itself may rupture.
  1) Insert the battery with its "+" and "–" electrodes oriented correctly.
  2) Leaving a battery which has been used for a long period of time or a battery which is no longer usable sitting inside the product can cause electrolyte leakage and other trouble. For this reason, ensure that such a battery is replaced at an early date. (As a general guideline, it is recommended that the battery be replaced every two years.)
     - The electrolyte inside the battery is highly corrosive, and if it should leak out, it will not only corrode the surrounding parts but also give rise to the danger of short-circuiting since it is electrically conductive. For this reason, ensure that the battery is replaced periodically.
  3) Do not disassemble the battery or throw it into a fire.
     - Do not disassemble the battery since fragments of the interior parts may fly into your eyes, which is extremely dangerous. It is also dangerous to throw a battery into a fire or apply heat to it as doing so may cause it to rupture.
  4) Do not cause the battery to be short-circuited. Under no circumstances must the battery tube be peeled off.
     - It is dangerous for metal items to make contact with the "+" and "–" electrodes of the battery since such objects may cause a high current to flow all at once, which will not only reduce the battery performance but also generate considerable heat, possibly leading to the rupture of the battery.
  5) This battery is not rechargeable. Under no circumstances must any attempt be made to recharge it.
- The disposal of used batteries after they have been replaced may be subject to restrictions imposed by local governing authorities. In such cases, ensure that their disposal is in accordance with these restrictions.

<Reference>
Following example shows the life calculation of the back-up battery used in assumed robot operation. 2000[mAh] of battery capacity is used for calculation. Note that the following value is not a guaranteed value, but only represents a calculated value. The values below were calculated with only the current consumption factored in. The calculations do not factor in electrolyte leakage and other forms of battery deterioration.
Life time may be shortened depending on ambient condition.

1) 2 cycles/day

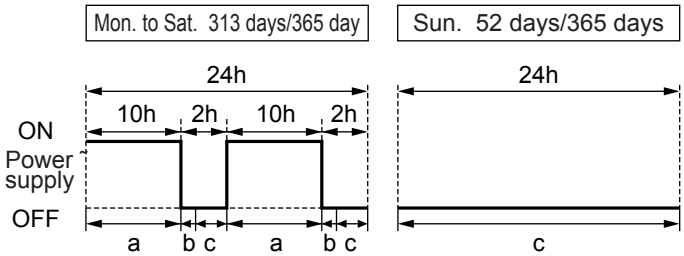

a : Current consumption in normal mode 3.6[μA]
b : Current consumption at power failure timer mode 280[μA]
* Power failure timer mode...Action mode in time period when the motor can respond to max. speed even the power is off (5sec).
c : Current consumption at power failure mode 110[μA]

Annual consumption capacity = (10h x a + 0.0014h x b + 2h x c) x 2 x 313 days + 24h x c x 52 days = 297.8[mAh]
Battery life = 2000[mAh]/297.8[mAh] = 6.7 (6.7159) [year]

2) 1 cycle/day
(2nd cycle of the above 1) is for rest.

Annual consumption capacity = (10h x a + 0.0014h x b + 14h x c) x 313 days + 24h x c x 52 days = 640.6[mAh]
Battery life = 2000[mAh]/630.6[mAh] = 3.1 (3.1715) [year]

Absolute System

When you make your own cable for 17-bit absolute encoder

When you make your own cable for 17-bit absolute encoder, connect the optional battery for absolute encoder, DV0P2060 or DV0P2990 as per the wiring diagram below. Connector of the battery for absolute encoder shall be provided by customer as well.

<Cautions>

Install and fix the battery securely. If the installation and fixing of the battery is not appropriate, it may cause the wire breakdown or damage of the battery.

Refer to the instruction manual of the battery for handling the battery.

- **Installation Place**
  1) Indoors, where the products are not subjected to rain or direct sun beam.
  2) Where the products are not subjected to corrosive atmospheres such as hydrogen sulfide, sulfurous acid, chlorine, ammonia, chloric gas, sulfuric gas, acid, alkaline and salt and so on, and are free from splash of inflammable gas, grinding oil, oil mist, iron powder or chips and etc.
  3) Well-ventilated and humid and dust-free place.
  4) Vibration-free place

Wiring Diagram

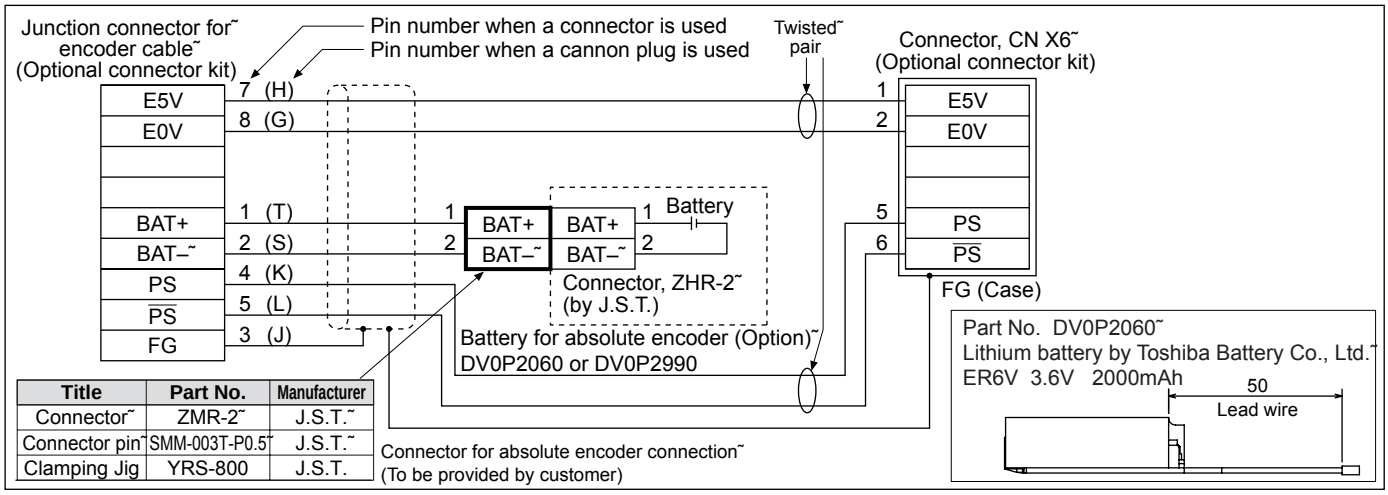

Title	Part No.	Manufacturer
Connector	ZMR-2	J.S.T.
Connector pin	SMM-003T-P0.5	J.S.T.
Clamping Jig	YRS-800	J.S.T.

Setup (Initialization) of Absolute Encoder

Execute the setup of absolute encoder in the following cases.

- Initial setup of the machine
- When absolute system down error protection (alarm No. 40) occurs
- When the encoder cable is pulled out

A home position can be set in the two ways below.

- **Normal homing**

  (Refer to "Homing Operation" on page 114.)

  Execute one of the eight types of homing operations and store that position in EEPROM as the position. Positioning is performed based on the stored position as the home position even after the power supply reset.

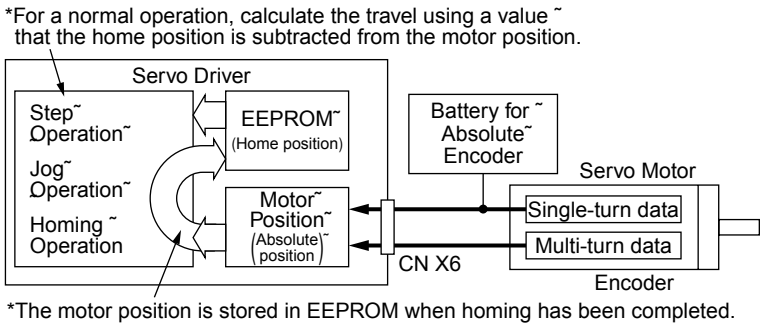

- **Define " 0" position of absolute encoder as a home position**

  Clear an absolute encoder so that a machine home position and the "0" position of absolute encoder can match with each other. By using a data of the absolute encoder after the power supply reset, positioning is performed based on the "0" position of absolute encoder as the home position.

  The absolute encoder is cleared through a console or "PANATERM®". A multi-turn data only is cleared by clearing the absolute encoder.

Clearing Absolute Encoder

• Using a console

(1) Turn the power supply on and mount it to the machine when you find a position where a machine home position and single-turn data of the absolute encoder become “0”. (A position of single-turn data = “0” is a position where the Z phase is output, only when the pulse output division ratio is “1:1”.)

(2) After mounting it, turn it one quarter or one half turn counterclockwise. (If you perform clearing at a position where the Z phase is output, the home position may turn completely in the worst case. Turn it counterclockwise slightly from the Z phase output position when performing clearing.)

(3) Put the console in the auxiliary function mode and enable the EXECUTION display for “Absolute encoder clear mode”. (Refer to “Absolute Encoder Clearing Function” in “Settings” on page 100.)

(Auxiliary function mode)

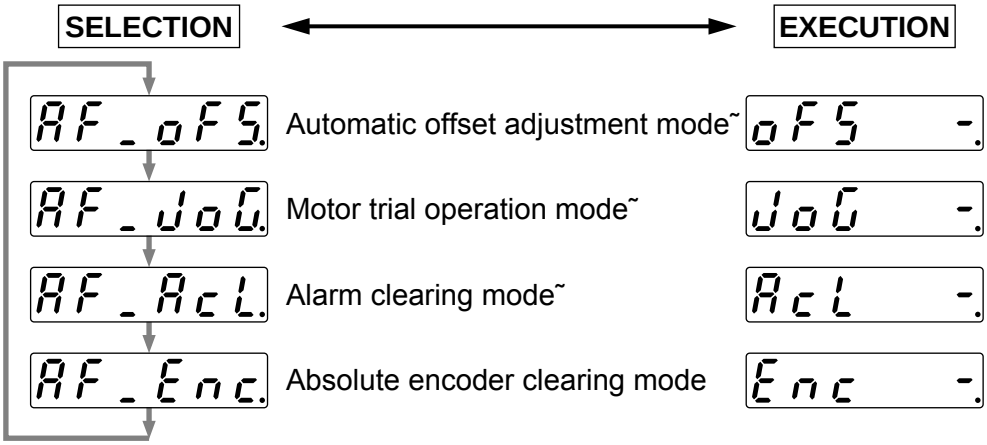

(4) Operate the key as shown below in the EXECUTION display.

When you keep on pressing˜(▲) (approximately 3 seconds),˜ “ - ” increases.

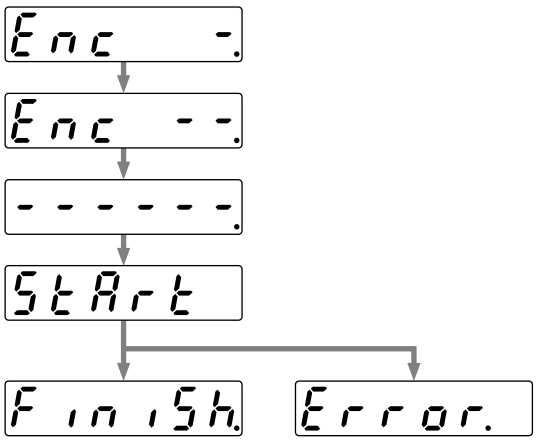

Note: For the incremental encoder, Error. display appears when absolute encoder˜ clearing is executed.

(5) Turn the power supply off once and turn it on again.

• Using the setup support software “ PANATERM®”

Basically, the step (3) and (4) only are different from the procedure by the console. The absolute encoder is cleared when you open the monitor window, select the [Absolute encoder] tab and press the [Clear] button for the multi-turn data and encoder error. A digital value of single-turn data is shown on the same monitor window. So, you do not need to check the Z phase as stated in 1).

Outline of Full-Closed Control

What Is Full-Closed Control ?

In this full-closed control, you can make a position control by using a external scale mounted externally which detects the machine position directly and feeds it back.. With this control, you can control without being affected by the positional variation due to the ball screw error or temperature and you can expect to achieve a very high precision positioning in sub-micron order.

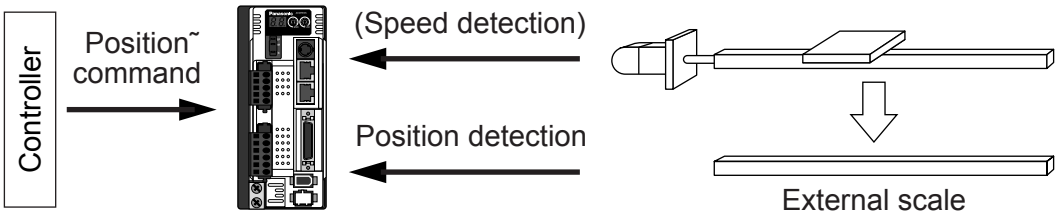

Preparation for full-closed control

1) Wire the external scale referring to “Wiring to CN X7” in “System Configuration and Wiring” on page 40.
2) Set SV.Pr02 (control mode setting) to “6” (full-closed control). (Change becomes enabled after turning the power supply on again.)
3) Specify each parameter according to “Cautions on Full-Closed Control” below.

Cautions on Full-Closed Control

A4P-series supports the external scale of a communication type. Execute the initial setup of parameters per the following procedures, then write into EEPROM and turn on the power again before using this function.

<How to make an initial setup of parameters related to external scale >

1) Turn on the power after checking the wiring.
2) Check the values (initial) feedback pulse sum and external scale feedback pulse sum with the console or with the setup support software, PANATERM®.
3) Move the work and check the travel from the initial values of the above 2).
4) If the travel of the feedback sum and the external scale feedback pulse sum are reversed in positive and negative, set up the reversal of external scale direction (SV.Pr7C) to 1.
5) Set up the external scale division ratio (SV.Pr78-7A) using the formula below,

$$\text{External scale division ratio} = \frac{\text{Total variation of external scale feedback pulse sum}}{\text{Total variation of feedback pulse sum}} = \frac{\text{SV.Pr78} \times 2^{\text{SV.Pr79}}}{\text{SV.Pr7A}}$$

We recommend 1/20 ≦ external scale division ratio ≦ 20.
If the external scale division ratio is set to a value smaller than 50/position loop gain (SV.Pr10, 18), control per pulse may not be performed. If the external scale division ratio is set to a larger value, an operating noise may become large.

* If the design value of the external scale division ratio is obtained, set up this value.

6) Set up appropriate value of hybrid deviation excess (SV.Pr7B) in 16 pulse unit of the external scale resolution, in order to avoid the damage to the machine.
   * A4P-series driver calculates the difference between the encoder position and the external scale position as hybrid deviation, and is used to prevent the machine runaway or damage in case of the external scale breakdown or when the motor and the load is disconnected.
   If the hybrid deviation excess range is too wide, detection of the breakdown or the disconnection will be delayed and error detection effect will be lost. If this is too narrow, it may detect the normal distortion between the motor and the machine under normal operation as an error.
   * When the external scale division ration is not correct, hybrid deviation excess error (Err25) may occur especially when the work travels long distance, even though the external scale and the motor position matches.
   In this case, widen the hybrid deviation excess range by matching the external scale division ratio to the closest value.

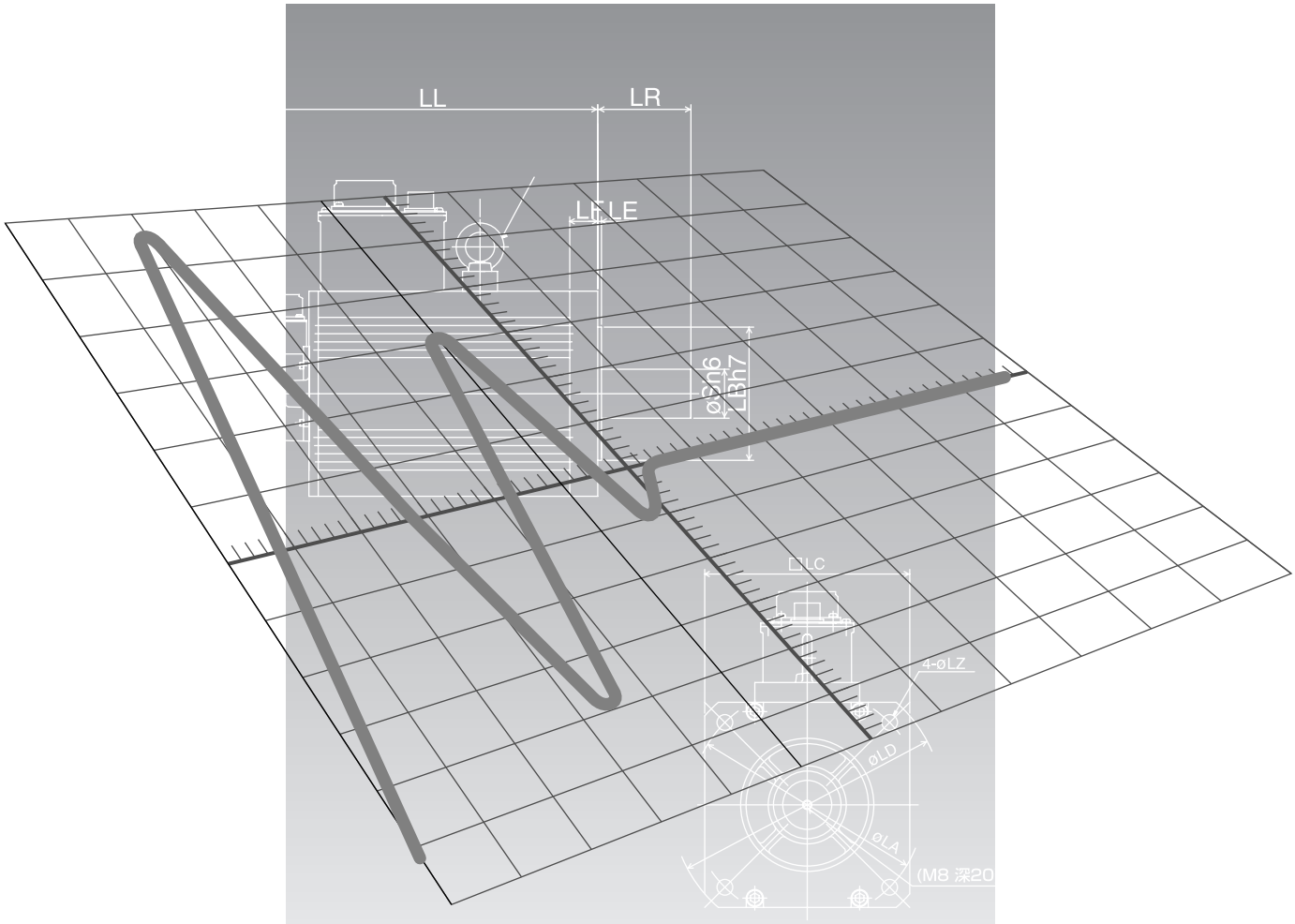

[Adjustment]

page

Gain Adjustment 142

Real-Time Auto-Gain Tuning Mode 144

Adaptive Filter 147

Normal Mode Auto-Gain Tuning 148

Release of Automatic Gain Adjusting Function . 151

Manual Gain Tuning (Basic) 152

Adjustment in Position Control Mode 153
Adjustment in Full-Closed Control Mode 154
Gain Switching Function 155
Suppression of Machine Resonance 158

Manual Gain Tuning (Application) 160

Instantaneous Speed Observer 160
Damping Control 161

Gain Adjustment

Purpose

It is required for the servo driver to run the motor in least time delay and as faithful as possible against the commands from the host controller. You can make a gain adjustment so that you can run the motor as closely as possible to the commands and obtain the optimum performance of the machine.

<e.g. : Ball screw>

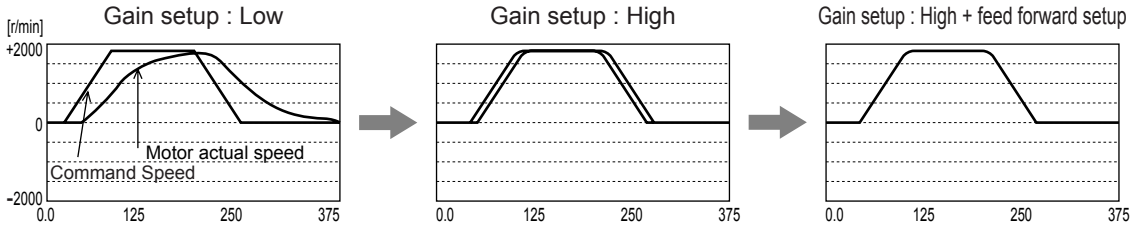

	Gain setup : Low	Gain setup : High	Gain setup : High + feed forward setup
Position loop gain˜	: 20˜	: 100˜	: 100˜
Velocity loop gain˜	: 100˜	: 50˜	: 50˜
Time constant of˜ V-loop integration˜	: 50˜	: 50˜	: 50˜
Velocity loop feed forward˜	: 0˜	: 0˜	: 500˜
Inertia ratio˜	: 100	: 100	: 100

Procedures

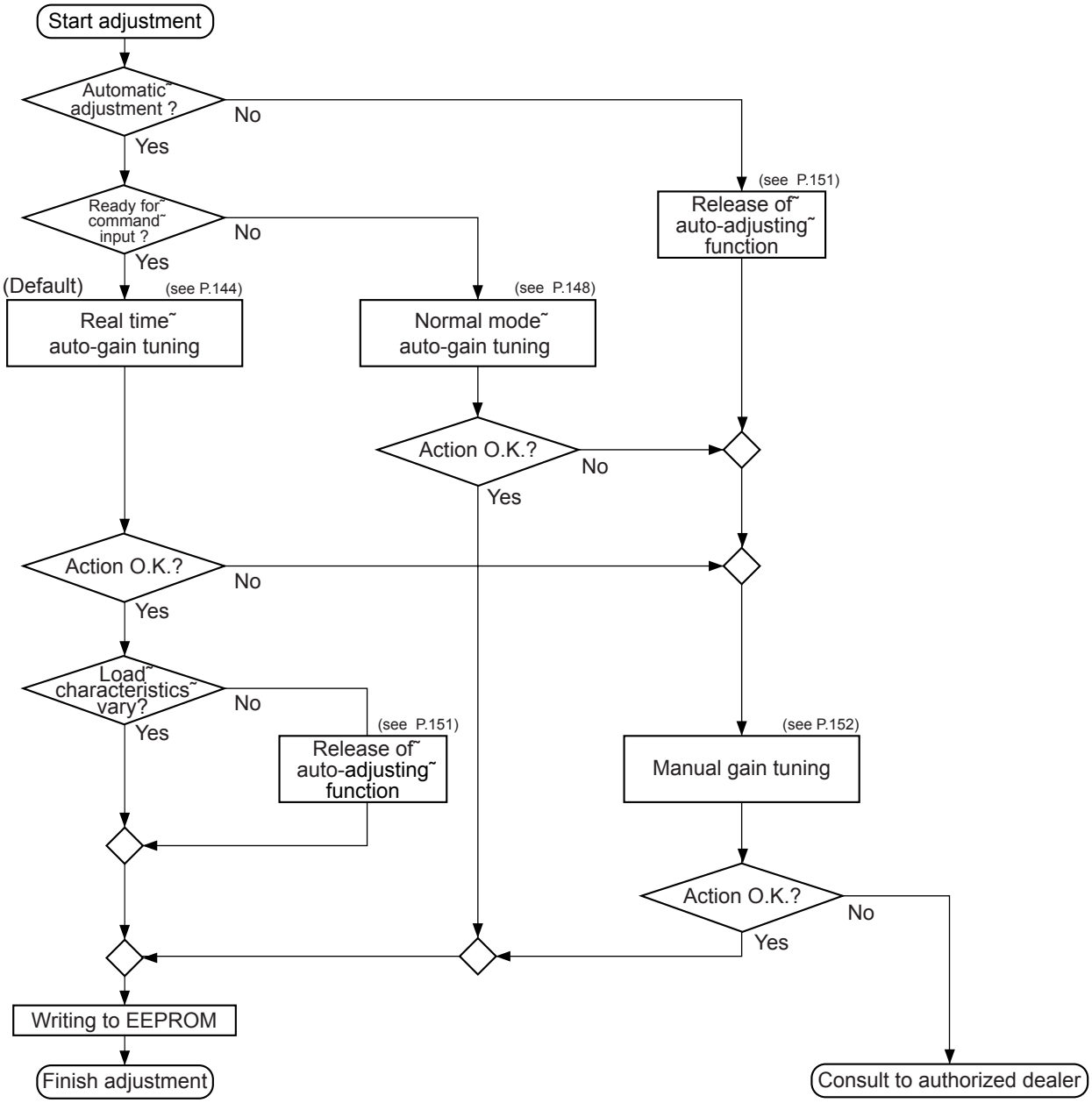

Type

Function			Explanation	Pages to refer
Automatic adjustment	Real-time auto-gain tuning		Estimates the load inertia of the machine in real time, and automatically sets up the optimum gain corresponding to this result.	P.144
		Adaptive filter	Reduces the resonance vibration point by automatically setting up the notch filter coefficient which removes the resonance component from the torque command while estimating the resonance frequency from the vibrating component which appears n the motor speed in actual operating condition.	P.147
	Normal mode auto-gain tuning		Sets up the appropriate gain automatically by calculating the load inertia from the torque required to run the motor in the command pattern automatically created in the driver.	P.148
	Release of automatic gain adjusting function		Describes the cautions when you invalidate the real-time auto-gain tuning or adaptive filter which are defaults.	P.151
Manual adjustment	Manual gain tuning (basic)		Execute the manual adjustment when real-time auto-gain tuning cannot be executed due to the limitation of control mode and load condition, or when you want to obtain an optimum response depending on each load.	P.152
		Basic procedure	Adjustment of position control mode	P.153
			Adjustment of full-closed control mode	P.154
		Gain switching function	You can expect to reduce vibration at stopping and settling time and to improve command compliance by switching the gains by internal data or external signals.	P.155
		Suppression of machine resonance	When the machine stiffness is low, vibration or noise may be generated due to the distorted axis, hence you cannot set the higher gain. You can suppress the resonance with two kinds of filter.	P.158
	Manual gain tuning (application)		You can obtain the higher performance while you are not satisfied with the performance obtained with the basic adjustment, using the following application functions.	P.160
		Instantaneous speed observer	Function which obtains both high response and reduction of vibration at stopping by estimating the motor speed with the load model, and hence improves the accuracy of speed detection.	P.160
		Damping control	Function which reduces vibration by removing the vibration frequency component while the front end of the machine vibrates.	P.161

<Remarks>

- Pay extra attention to safety, when oscillation (abnormal noise and vibration) occurs, shut off the main power, or turn to Servo-OFF.

Real-Time Auto-Gain Tuning Mode

Outline

Estimates the load inertia of the machine in real time and sets up the optimum gain automatically responding to the result. Also, an adaptive filter can cope with any load caused by the resonance.

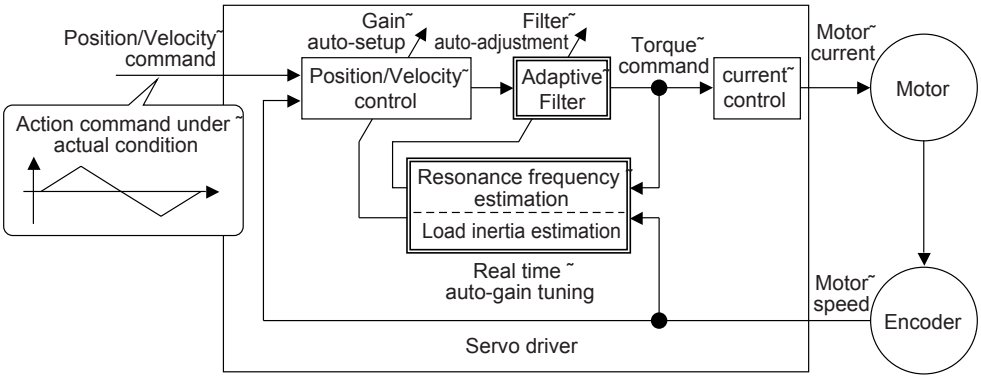

Applicable Range

	Conditions under which the real-time auto-gain tuning is activated
Control mode	•Real time auto-gain tuning is applicable to all control modes. However, the load inertia estimation will be disabled when a motor trial operation function is executed and a frequency characteristics measurement function of "PANATERM®" is used.
Others	•The servo turns on. •Any factors, including Deviation Counter Clear command input inhibition and torque limit, other than control parameter are set appropriately and the motor can rotate normally without any problem.

Caution

Real-time auto-gain tuning may not be executed properly under the conditions described in the table below. In these cases, use the normal mode auto-gain tuning (refer to P.148), or execute the manual auto-gain tuning (refer to P.152).

	Conditions which obstruct real-time auto-gain tuning action
Load inertia	• The load is too small or large compared to the rotor inertia. (less than 3 times or more than 20 times) • The load inertia changes too quickly (10 [s] or less)
Load	• The machine stiffness is extremely low. • A chattering such as backlash exists.
Action pattern	• The motor is running continuously at low speed of (100 [r/min] or lower. • Acceleration/deceleration is slow (2000 [r/min] per 1[s] or low). • Acceleration/deceleration torque is smaller than unbalanced weighted/viscous friction torque. • When the speed condition of 100 [r/min] or more and acceleration/deceleration condition of 2000 [r/min] per 1 [s] are not maintained for 80 [ms].

How to Operate

1) Bring the motor to stall (Servo-OFF).
2) Set up SV.Pr21 (Real time auto tuning set up) to 1-7.

Setup value	Real time auto-gain tuning	Varying degree of load inertia in motion
0	(not in use)	–
[1]	normal mode	no change
2		slow change
3		rapid change
4	vertical axis mode	no change
5		slow change
6		rapid change
7	no gain switching mode	no change

When the changing degree of load inertia is large, set up 3 or 6.
When the motor is used for vertical axis, set up 4 to 6.
When vibration occurs during gain switching, set up 7.

3) Set up SV.Pr22 (Machine stiffness at auto tuning) to 0 or smaller value.
4) Turn to Servo-ON to run the machine normally.
5) Gradually increase SV.Pr22 (Machine stiffness at auto tuning) when you want to obtain a better response. Lower the value (0 to 3) when you experience abnormal noise or oscillation.
6) Write the result to EEPROM when you want to save it.

Insert the console connector to CN X6 of the driver, then turn on the driver power. — r 0

Setup of parameter, Pr21

Press (S SET). — dP_SPd

Press (M MODE). — PA_ 00.

Match to the parameter No. to be set up with (▲) (▼). (Here match to Pr21.) — PA_ 21.

Press (S SET). — 1.

Change the setup with (▲) (▼).

Press (S SET). — PA_ 21.

Setup of parameter, Pr22

Match to Pr22 with (▲). — PA_ 22.

Press (S SET). — 4 (default values)

Numeral increases with (▲), and decreases with (▼).

Press (S SET).

Writing to EEPROM

Press (M MODE). — EE_SEt

Press (S SET). — EEP -.

Bars increase as the right fig. shows by keep pressing (▲) (approx. 5sec). — EEP --. / ------.

Writing starts (temporary display). — StArt

Finish — FinISh. / rESEt. (Writing completes) / Error. (Writing error occurs)

Press (S SET) to return to **SELECTION display**, after writing finishes.

Adjustment

Real-Time Auto-Gain Tuning Mode

Parameters Which Are Automatically Set

Following parameters are automatically adjusted.

SV.PrNo.	Title
10˜	1st position loop gain˜
11˜	1st velocity loop gain˜
12˜	1st velocity loop integration time constant˜
13˜	1st speed detection filter˜
14˜	1st torque filter time constant˜
18˜	2nd position loop gain˜
19˜	2nd velocity loop gain˜
1A˜	2nd velocity loop integration time constant˜
1B˜	2nd speed detection filter˜
1C˜	2nd torque filter time constant˜
20	Inertia ratio

Also following parameters are automatically set up.

SV.PrNo.	Title	Setup value
15˜	Velocity feed forward˜	300˜
16˜	Feed forward filter time constant˜	50˜
27˜	Velocity observer˜	0˜
30˜	2nd gain action set up˜	1˜
31˜	1st control switching mode˜	10˜
32˜	1st control switching delay time˜	30˜
33˜	1st control switching level˜	50˜
34˜	1st control switching hysteresis˜	33˜
35	Position loop gain switching time	20

<Notes>

- When the real-time auto-gain tuning is valid, you cannot change the parameters which are automatically adjusted.
- SV.Pr31 becomes 10 at position or full closed control and when SV.Pr21 (Real time auto tuning set up) is 1 to 6, and becomes 0 in other cases.

Adaptive Filter

Invalidation of Adaptive Filter

Estimates the resonance frequency out of vibration component presented in the motor speed in motion, then removes the resonance component from the torque command by setting up the notch filter coefficient automatically, hence reduces the resonance vibration.
The adaptive filter is enabled by setting SV.Pr23 (Adaptive filter mode) to any value other than “0”.
The adaptive filter may not work properly under the following conditions. In these cases, take measures to resonance according to the manual adjustment procedures, using the 1st notch filter (SV.Pr1D and 1E) and the 2nd notch filter (SV.Pr28 to 2A).

	Conditions which obstruct adaptive filter action
Resonance point	• Resonance frequency is lower than 300[Hz].˜ • Resonance peak is low, or control gain is low where the motor speed is not affected by this.˜ • Multiple resonance points exist.˜
Load	• Motor speed variation with high harmonic component is generated due to non-linear factors such as ˜ backlash.˜
Command pattern	• Acceleration/deceleration is rapid such as 30000[r/min] per 1[s].

<Notes>
The adaptive filter may be disabled also if SV.Pr23 is set to any value other than “0”. Refer to “Invalidation of Adaptive Filter” on page 151.

How to Operate

1) Validate the adaptive filter by setting up SV.Pr23 (Adaptive filter mode) to 1.
   Adaptive filter automatically estimates the resonance frequency out of vibration component presented in the motor speed in motion, then removes the resonance components from the torque command by setting up the notch filter coefficient automatically, hence reduces the resonance vibration.
2) Write the result to EEPROM when you want to save it.

Setup˜value	Adaptive filter	Adaptive action
0˜	Invalid˜	–˜
[1]˜	Valid	Yes˜
2		No (Hold)

When adaptation finishes (SV.Pr2F does not change), and resonance point seems not change, set up the value to 2.

Caution

(1) After the start-up, you may experience abnormal noise and oscillation right after the first operation or when you increase the setup of SV.Pr22 (Machine stiffness at auto tuning), until load inertia is identified (estimated) or adaptive filter is stabilized. These are not failures as long as they disappear immediately. If they persist over 3 reciprocating operations, take the following measures in possible order.
   1) Write the parameters which have given the normal operation into EEPROM.
   2) Lower the setup of SV.Pr22 (Machine stiffness at auto tuning).
   3) Invalidate the adaptive filter by setting up SV.Pr23 (Adaptive filter mode) to 0.
      (Reset of inertia calculation and adaptive action)
   4) Set up the notch filter manually.
(2) When abnormal noise and oscillation occur, SV.Pr2F (Adaptive filter frequency) might have changed to extreme values. Take the same measures as the above in these cases.
(3) Among the results of real-time auto-gain tuning, SV.Pr20 (Inertia ratio) will be written into EEPROM at every 30 minutes. When you turn the power supply on again, auto-gain tuning will be executed using this data as initial values.
(4) When you enable the real-time auto-gain tuning, SV.Pr27 (Velocity observer) will be disabled automatically.
(5) During the trial run and frequency characteristics measurement of “PANATERM®”, the load inertia estimation will be disabled.

Normal Mode Auto-Gain Tuning

Outline

The motor will be driven per the command with a pattern generated by the driver automatically. The driver estimates the load inertia from the necessary torque, and sets up an appropriate gain automatically.

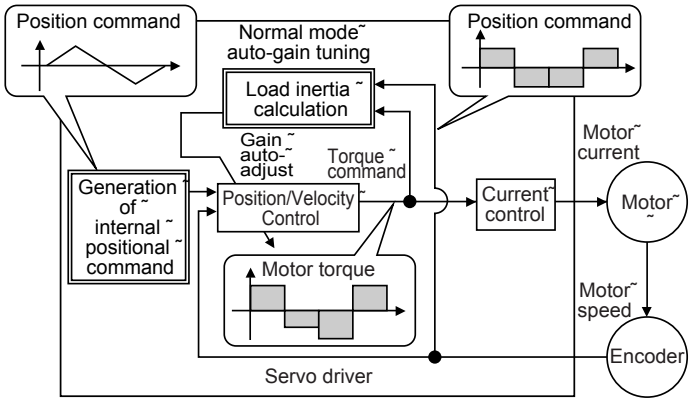

Applicable Range

This function works under the following condition.

	Conditions under which the normal mode auto-gain tuning is activated
Control mode	Applies to all control modes.
Others	• Servo-ON status

<Remarks>

Set up the torque limit selection (SV.Pr03) to 1.
When you set up other than 1, driver may not act correctly.

Caution

Normal mode auto-gain tuning may not be work properly under the following conditions. In these cases, set up in manual gain tuning

	Conditions which obstruct normal auto-gain tuning
Load inertia	• Too small or too big compared to the rotor inertia (smaller than 3 times or larger than 20 times) • Load inertia varies.
Load	• Machine stiffness is extremely low. • Chattering such as backlash exists.

- Tuning error will be triggered when an error, Servo-OFF, the main power shutdown, validation of over-travel inhibition, or deviation counter clear occurs during the normal mode auto-gain tuning.
- If the load inertia cannot be calculated even though the normal mode auto-gain tuning is executed, gain value will not change and be kept as same as that of before the execution.
- The motor output torque during the normal auto-gain tuning is permitted to the max. torque set with SV.Pr5E (Setup of torque limit).
- Please note that each signal of the CW over-travel inhibit input, CCW over-travel inhibit input, emergency stop, deceleration-and-stop and temporary stop is ignored.

> Pay an extra attention to the safety. When oscillation occurs, shut off the main power or turn to Servo-OFF immediately. Bring back the gain to default with parameter setup. Refer to cautions of P.95, "Auto-Gain Tuning Mode" of Setting as well.

Auto-Gain Tuning Action

(1) In the normal mode auto-gain tuning, you can set up the response with machine stiffness No..

> Machine stiffness No.
> • Represents the degree of machine stiffness of the customer's machine and have values from o to 15. You can set a higher No. to the high stiffness machine and set up a higher gain.
> • Usually start setting up with a lower value and increase gradually to repeat auto-gain tuning in the range where no oscillation, no abnormal noise, nor vibration occurs.

(2) This tuning repeats max. 5 cycles of the action pattern set with SV.Pr25 (Normal auto tuning motion setup). Action acceleration will be doubled every one cycle after third cycle. Tuning may finish, or action acceleration does not vary before 5th cycle depending on the load, however, this is nor an error.

How to Operate

(1) Set up the action pattern with SV.Pr25.
(2) Shift the load to the position where no hazard is expected even though the action pattern which is set with SV.Pr25 is executed.
(3) Prohibit the command entry. (Do not enter the action command during the normal mode auto-gain tuning.)
(4) Turn to Servo-ON.
(5) Start up the auto-gain tuning. Use the "PANATERM®".
(6) Adjust the machine stiffness to the level at which no vibration occurs and obtain the required response.
(7) Write the result to EEPROM, if it is satisfactory.

Parameters Which Are Automatically Set

Table of auto-gain tuning

Pr No.	Title	Stiffness value															
		0	[1]	2	3	[4]	5	6	7	8	9	10	11	12	13	14	15
10	1st position loop gain	12	32	39	48	63	72	90	108	135	162	206	251	305	377	449	557
11	1st velocity loop gain	9	18	22	27	35	40	50	60	75	90	115	140	170	210	250	310
12	1st velocity loop integration time constant	62	31	25	21	16	14	12	11	9	8	7	6	5	4	4	3
13	1st speed detection filter	0	0	0	0	0	0	0	0	0	0	0	0	0	0	0	0
14	1st torque filter time constant *2	253	126	103	84	65	57	45	38	30	25	20	16	13	11	10	10
15	Velocity feed forward	300	300	300	300	300	300	300	300	300	300	300	300	300	300	300	300
16	Feed forward filter time constant	50	50	50	50	50	50	50	50	50	50	50	50	50	50	50	50
18	2nd position loop gain	19	38	46	57	73	84	105	126	157	188	241	293	356	440	524	649
19	2nd velocity loop gain	9	18	22	27	35	40	50	60	75	90	115	140	170	210	250	310
1A	2nd velocity loop integration time constant	999	999	999	999	999	999	999	999	999	999	999	999	999	999	999	999
1B	2nd speed detection filter	0	0	0	0	0	0	0	0	0	0	0	0	0	0	0	0
1C	2nd torque filter time constant *2	253	126	103	84	65	57	45	38	30	25	20	16	13	11	10	10
20	Inertia ratio	Estimated load inertia ratio															
27	Velocity observer	0	0	0	0	0	0	0	0	0	0	0	0	0	0	0	0
30	2nd gain action set up	1	1	1	1	1	1	1	1	1	1	1	1	1	1	1	1
31	1st control switching mode	10	10	10	10	10	10	10	10	10	10	10	10	10	10	10	10
32	1st control switching delay time	30	30	30	30	30	30	30	30	30	30	30	30	30	30	30	30
33	1st control switching level	50	50	50	50	50	50	50	50	50	50	50	50	50	50	50	50
34	1st control switching hysteresis	33	33	33	33	33	33	33	33	33	33	33	33	33	33	33	33
35	Position loop gain switching time	20	20	20	20	20	20	20	20	20	20	20	20	20	20	20	20

represents parameters with fixed value. Default for A to C-frame is 4, and 1 for D to F-frame.

*2 Lower limit for stiffness value is 10 for 17-bit encoder, and 25 for 2500P/r encoder.

Normal Mode Auto-Gain Tuning

How to Operate from the Console

(1) Turn to the normal auto-gain tuning mode from the monitor mode, by pressing the SET button, then press the mode switching button three times. For details, refer to P.81, "Structure of Each Mode" of Preparation.

Display of rotational speed of the motor (initial display)

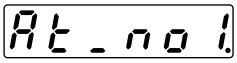

Machine stiffness No.

(2) Enter the machine stiffness No. by pressing ▲ ▼.

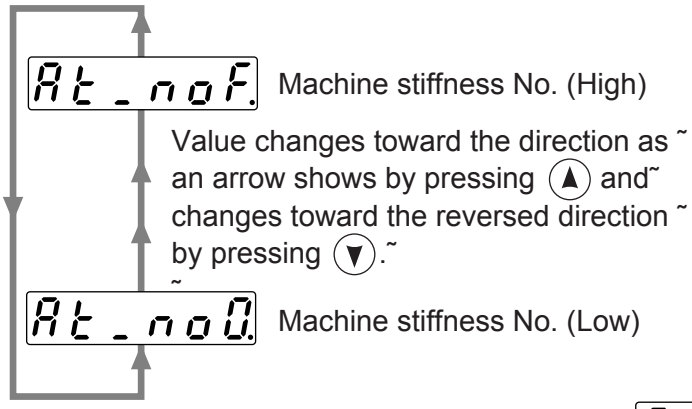

Drive method	Machine stiffness No.
Ball screw direct connection	8 to 14
Ball screw + timing belt	6 to 12
Timing belt	4 to 10
Gear, Rack & Pinion	2 to 8
Others, low stiffness machine	0 to 8

(3) Shift to MONITOR/EXECUTION mode by pressing S SET.

(4) Operation at MONITOR/EXECUTION mode
Keep pressing ▲ until the display changes to StArt.
- Pin-29 of the connector, CN X5 to be Servo-ON status.

Keep pressing ▲ for approx.3sec, then bar increase as the right fig. shows.

The motor starts rotating.
For approx. 15 sec, the motor repeats max. 5 cycles of CCW/CW rotation, 2 revolutions each direction per one cycle. Tuning may finish before 5th cycles, however, this is not an error.

(5) Write the gain value to EEPROM to prevent them from being lost due to the power shut off.

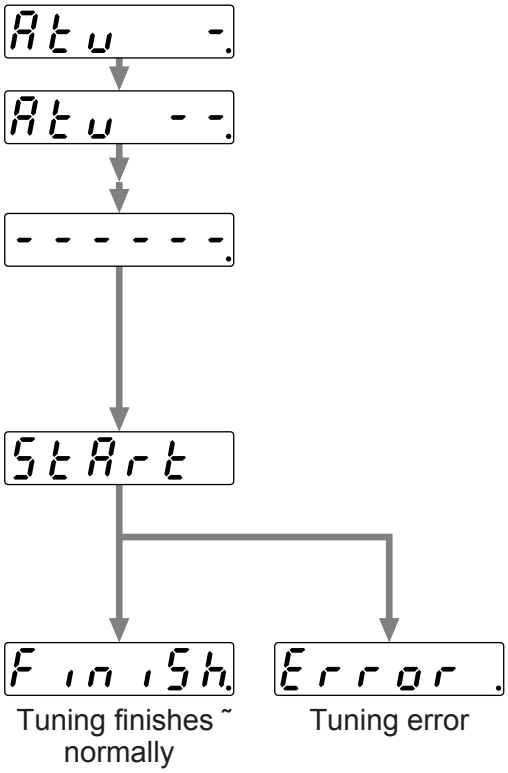

<Caution>

Do not use the normal mode auto-gain tuning with the motor and driver alone. SV.Pr20 (Inertia ratio) becomes to 0.

<Notes>

Content	Cause	Measure
Display of error.	One of alarm, Servo-OFF or deviation counter clear has occurred.	• Avoid an operation near the limit switch or home sensor switch. • Turn to Servo-ON. • Release the deviation counter clear
Value of parameter related to gain (such as SV/Pr10) is kept as same as before the execution.	Load inertia cannot be identified.	• Lower SV.Pr10 to 10 and SV.Pr11 to 50, then execute the tuning. • Adjust the gain manually. (Calculate the load inertia, and then enter.)

Outline

Cautions are described when you want to invalidate the real time auto-gain tuning of default or the adaptive filter.

Caution

Execute the release of the automatic adjusting functions while all action stop (Servo-OFF)

Invalidation of Real-Time Auto-Gain Tuning

You can stop the automatic calculation of SV.Pr20 (Inertial ratio) and invalidate the real-time auto-gain tuning by setting up SV.Pr21 (Real time auto tuning set up) to 0.
Note that the calculation result of SV.Pr20 (Inertia ratio) will be held, and if this parameter becomes abnormal value, use the normal mode auto-gain tuning or set up proper value manually obtained from formula or calculation.

Invalidation of Adaptive Filter

When you set up SV.Pr23 (Adaptive filter mode) to 0, adaptive filter function which automatically follows the load resonance will be invalidated.
If you invalidate the adaptive filter which have been working correctly, noise and vibration may occur due to the effect of resonance which have been suppressed.
Therefore, execute the copying function of the setup of adaptive filter (SV.Pr2F) to the 1st notch frequency (SV.Pr1D), or set up SV.Pr1D (1st notch frequency) manually by using the table below, then invalidate this filter.

SV.Pr2F	1st notch frequency [Hz]
0~	(invalid)~
1~	(invalid)~
2~	(invalid)~
3~	(invalid)~
4~	(invalid)~
5~	1482~
6~	1426~
7~	1372~
8~	1319~
9~	1269~
10~	1221~
11~	1174~
12~	1130~
13~	1087~
14~	1045~
15~	1005~
16~	967~
17~	930~
18~	895~
19~	861~
20~	828~
21	796

SV.Pr2F	1st notch frequency [Hz]
22~	766~
23~	737~
24~	709~
25~	682~
26~	656~
27~	631~
28~	607~
29~	584~
30~	562~
31~	540~
32~	520~
33~	500~
34~	481~
35~	462~
36~	445~
37~	428~
38~	412~
39~	396~
40~	381~
41~	366~
42~	352~
43	339

SV.Pr2F	1st notch frequency [Hz]
44~	326~
45~	314~
46~	302~
47~	290~
48~	279~
49~	269 (invalid when Pr22≧15)~
50~	258 (invalid when Pr22≧15)~
51~	248 (invalid when Pr22≧15)~
52~	239 (invalid when Pr22≧15)~
53~	230 (invalid when Pr22≧15)~
54~	221 (invalid when Pr22≧14)~
55~	213 (invalid when Pr22≧14)~
56~	205 (invalid when Pr22≧14)~
57~	197 (invalid when Pr22≧14)~
58~	189 (invalid when Pr22≧14)~
59~	182 (invalid when Pr22≧13)~
60~	(invalid)~
61~	(invalid)~
62~	(invalid)~
63~	(invalid)~
64~	(invalid)
~	

*Set up 1500 to SV.Pr1D (1st notch frequency) in case of “ invalid ” of the above table.

Manual Gain Tuning (Basic)

As explained previously, MINAS-A4P series features the automatic gain tuning function, however, there might be some cases where this automatic gain tuning cannot be adjusted properly depending on the limitation on load conditions. Or you might need to readjust the tuning to obtain the optimum response or stability corresponding to each load.
Here we explain this manual gain tuning method by each control mode and function.

Before Making a Manual Adjustment

You can adjust with the sound or motor (machine) movement by using the console, however, you can adjust more securely by using wave graphic function of the setup support software, PANATERM®, or by measuring the analog voltage waveform using a monitoring function.

1. Analog monitor output

You can measure the actual motor speed, commanded speed, torque and deviation pulses by analog voltage level by using an oscilloscope. Set up the types of the signals or the output voltage level with SV.Pr07 (Speed monitor (SP) selection) and SV.Pr08 (Torque monitor (IM) selection).
For details, refer to P.49, "Wiring to the Connector, CN X5" of Preparation, and P.56, "Parameter Setup" of Setting.

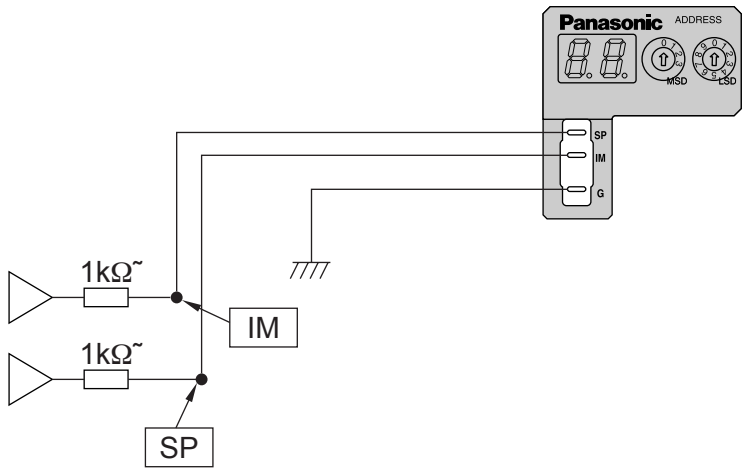

2. Waveform graphic function of the PANATERM®

You can display the command to the motor, motor movement (speed, torque command and deviation pulses) as a waveform graphic on PC display. Refer to P.103, "Outline of the Setup Support Software, PANATERM®".

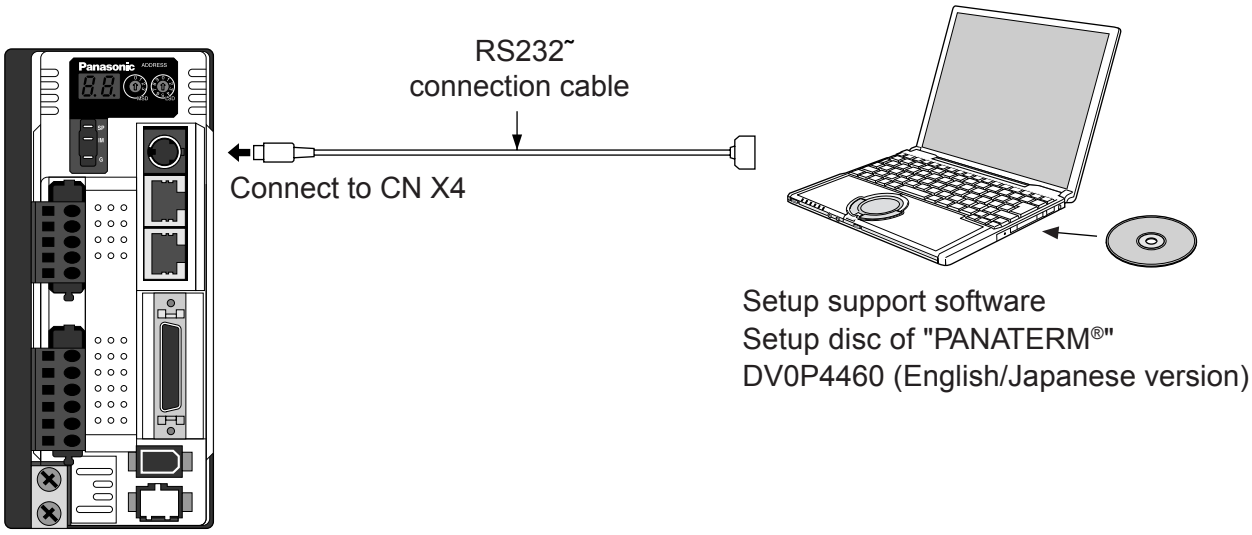

Adjustment in Position Control Mode

Position control of MINAS-A4P series is described in Block diagram of P.224.
Make adjustment in position control per the following procedures.

(1) Set up the following parameters to the values of the table below.

Servo Parameter No. (SV.Pr* *)	Title of parameter	Standard value
10˜	1st position loop gain˜	27˜
11˜	1st velocity loop gain˜	15˜
12˜	1st velocity loop integration time constant˜	37˜
13˜	1st speed detection filter˜	0˜
14˜	1st torque filter time constant˜	152˜
15˜	Velocity feed forward˜	0˜
16˜	Feed forward filter time constant˜	0˜
18˜	2nd position loop gain˜	27˜
19˜	2nd velocity loop gain˜	15˜
1A˜	2nd velocity loop integration time constant˜	37˜
1B˜	2nd speed detection filter˜	0˜
1C˜	2nd torque filter time constant˜	152˜
1D˜	1st notch frequency˜	1500˜
1E	1st notch width selection	2

Servo Parameter No. (SV.Pr* *)	Title of parameter	Standard value
20˜	Inertia ratio˜	100˜
21˜	Real time auto tuning set up˜	0˜
23˜	Adaptive filter mode˜	0˜
2B˜	1st vibration suppression frequency˜	0˜
2C˜	1st vibration suppression filter˜	0˜
2D˜	2nd vibration suppression frequency˜	0˜
2E˜	2nd vibration suppression filter˜	0˜
30˜	2nd gain action set up˜	0˜
31˜	1st control switching mode˜	0˜
32˜	1st control switching delay time˜	0˜
33˜	1st control switching level˜	0˜
34˜	1st control switching hysteresis˜	0˜
35˜	Position loop gain switching time˜	0˜
4C˜	Smoothing filter˜	1˜
4D	FIR filter set up	0

(2) Enter the inertia ratio of SV.Pr20. Measure the ratio or setup the calculated value.
(3) Make adjustment using the standard values below.

Order	Servo Parameter No. (SV.Pr* *)	Title of parameter	Standard value	How to adjust
1˜	SV.Pr11˜	1st velocity loop gain˜	30˜	Increase the value within the range where no abnormal noise and no vibration occur. If they occur, lower the value.˜
2˜	SV.Pr14˜	1st torque filter time constant˜	50˜	When vibration occurs by changing SV.Pr11, change this value.˜ Setup so as to make SV.Pr11 x SV.Pr14 becomes smaller than 10000. If you want to suppress vibration at stopping, setup larger value to SV.Pr14 and smaller value to SV.Pr11. If you experience too large vibration right before stopping, lower than value of SV.Pr14.˜
3˜	SV.Pr10˜	1st position loop gain˜	50˜	Adjust this observing the positioning time. Larger the setup, faster the positioning time you can obtain, but too large setup may cause oscillation.˜
4˜	SV.Pr12˜	1st velocity loop integration time constant˜	25˜	Setup this value within the range where no problem occurs. If you setup smaller value, you can obtain a shorter positioning time, but too small value may cause oscillation. If you setup too large value, deviation pulses do not converge and will be remained.˜
5	SV.Pr15	Velocity feed forward	300	Increase the value within the range where no abnormal noise occurs.˜ Too large setup may result in overshoot or chattering of position complete signal, hence does not shorten the settling time. You can improve by setting up SV.Pr16 (Feed forward filter time constant) to larger value.

Manual Gain Tuning (Basic)

Adjustment in Full-Closed Control Mode

Full-closed control of MINAS-A4P series is described in Block diagram of P.225 of Full-Closed Control. Adjustment in full-closed control is almost same as that in position control described in P.153 “Adjustment in Position Control Mode”, and make adjustments of parameters per the procedures except cautions of P.140, “Outline of Full-Closed Control”.
Here we explain the setup of external scale ratio, hybrid deviation excess and hybrid control at initial setup of full-closed control.

1) Setup of external scale ratio

Setup the external scale ratio using the numerator of external scale division (SV.Pr78), the multiplier for numerator of external scale division (SV.Pr79) and denominator of external scale division (SV.Pr7A).

- Check the encoder pulse counts per one motor revolution and the external scale pulse counts per one motor revolution, then set up the numerator of external scale division (SV.Pr78), the multiplier for numerator of external scale division (SV.Pr79) and denominator of external scale division so that the following formula can be established.

$$\frac{\text{SV.Pr78}\ \boxed{1} \times 2^{\text{SV.Pr79}\boxed{17}}}{\text{SV.Pr7A}\ \boxed{5000}} = \frac{\text{Number of encoder pulses per motor rotation}}{\text{Number of external scale pulses per motor rotation}}$$

- If this ratio is incorrect, a gap between the position calculated from the encoder pulse counts and that of calculated from the external scale pulse counts will be enlarged and hybrid deviation excess (Err.25) will be triggered when the work or load travels a long distance.
- When you set up SV.Pr78 to 0, the encoder pulse counts will be automatically set up.

2) Setup of hybrid deviation excess

Set up the minimum value of hybrid deviation excess (SV.Pr78) within the range where the gap between the motor (encoder) position and the load (external scale) position will be considered to be an excess.

- Note that the hybrid deviation excess (Error code No.25) may be generated under other conditions than the above 1), such as reversed connection of the external scale or loose connection of the motor and the load.

Caution

(1) Enter the position command based on the external scale reference.
(2) The external scales to used for full-closed control are as follows.
- AT500 series by Mitutoyo (Resolution 0.05[μm], max. speed 2[m/s])
- ST771 by Mitutoyo (Resolution 0.5[μm], max. speed 2[m/s])

(3) To prevent the runaway and damage of the machine due to the setup of the external scale, setup the hybrid deviation excess (SV.Pr7B) to the appropriate value, in the unit of external scale resolution.

(4) **We recommend the external scale as 1/20 ≦ external scale ratio ≦ 20.**

If you setup the external scale ratio to smaller value than 50/position loop gain (SV.Pr10 and 18), you may not be able to control by one pulse unit. If you set up too large external scale ratio, you may expect larger noise in movement.

Gain Switching Function

At manual gain tuning, you can set 2nd gain manually in addition to 1st gain and you can switch the gain depending on the various requirements of the action such cases as,

- you want to increase the response by increasing the gain in motion
- you want to increase the servo-lock stiffness by increasing the gain at stopping
- switch to the optimum gain according to the action mode
- lower the gain to suppress the vibration at stopping.

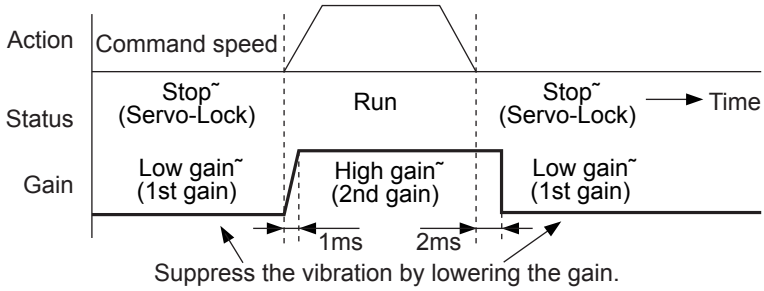

<Example>

Following is the example when you want to reduce the noise at motor in stall (Servo-Lock), by setting up to lower gain after the motor stops.

- Make adjustment referring to the auto-gain tuning table (P.149) as well.

Servo˜ Parameter˜ No.˜ (SV.Pr**)	Title of parameter	Execute manual ˜ gain-tuning ˜ without gain switching	➡	Set up the same˜ value as SV.Pr10-14 (1st gain)˜ to SV.Pr18-1C ˜ (2nd gain)	➡	Set up ˜ SV.Pr30-35 ˜ (Gain switching ˜ condition)	➡	Adjust SV.Pr11 and 14 at stopping˜ (1st gain)
10˜	1st position loop gain˜	63˜		˜		˜		˜
11˜	1st velocity loop gain˜	35˜		˜		˜		27˜
12˜	1st velocity loop integration time constant˜	16˜		˜		˜		˜
13˜	1st speed detection filter˜	0˜		˜		˜		˜
14˜	1st torque filter time constant˜	65˜		˜		˜		84
15˜	Velocity feed forward˜	300˜		˜		˜		
16˜	Feed forward filter time constant˜	50˜		˜		˜		
18˜	2nd position loop gain˜	˜		63˜		˜		
19˜	2nd velocity loop gain˜	˜		35˜		˜		
1A˜	2nd velocity loop integration time constant˜	˜		16˜		˜		
1B˜	2nd speed detection filter˜	˜		0˜		˜		
1C˜	2nd torque filter time constant˜	˜		65		˜		
30˜	2nd gain action set up˜	0				1˜		
31˜	1st control switching mode˜					7˜		
32˜	1st control switching delay time˜					30˜		
33˜	1st control switching level˜					0˜		
34˜	1st control switching hysteresis˜					0˜		
35	Position loop gain switching time					0		
20˜ ˜	Inertia ration	• Enter the known value ˜ from load calculation • Measure the inertia ˜ ratio by executing nor mal auto-gain tuning˜ • Default is 250						

Adjustment

Manual Gain Tuning (Basic)

Setup of Gain Switching Condition

• Positing control mode, Full-closed control mode (○ : Corresponding parameter is valid, – : invalid)

Setup of gain switching condition			Setup parameters at position control, full-closed control		
			Delay time * 1	Level	Hysteresis * 2
SV.Pr31	Switching condition to 2nd gain	Fig.	SV.Pr32	SV.Pr33	SV.Pr34
0	Fixed to 1st gain		–	–	–
1	Fixed to 2nd gain		–	–	–
2	Gain switching input, GAIN ON		–	–	–
3	Variation of torque command is large.	A	○	○ *3[0.05%/166μs]	○ *3[0.05%/166μs]
4	Fixed to 1st gain		–	–	–
5	Speed command is large.	C	○	○ [r/min]	○ [r/min]
6	Position deviation/Full-closed position deviation is large	D	○	○ *4[pulse]	○ *4[pulse]
7	Position command exists.	E	○	–	–
8	Not in positioning complete nor in full-closed positioning complete	F	○	–	–
9	Speed	C	○	○ [r/min]	○ [r/min]
10	Command exists + velocity	G	○	○ [r/min] *6	○ [r/min]*6

*1 Delay time (SV.Pr32 and 37) will be valid only when returning from 2nd to 1st gain.
*2 Hysteresis is defined as the fig. below shows.
*3 When you make it a condition that there is 10% torque variation during 166μs, set up the value to 200.
10%/166μs = Setup value 200 x [0.05%/166μs]
*4 Designate with either the encoder resolution or the external scale resolution depending on the control mode.
*5 When you make it a condition that there is speed variation of 10r/min in 1s, set up the value to 1.
*6 When SV.Pr31=10, the meanings of delay time, level and hysteresis are different from the normal. (refer to Fig. G)

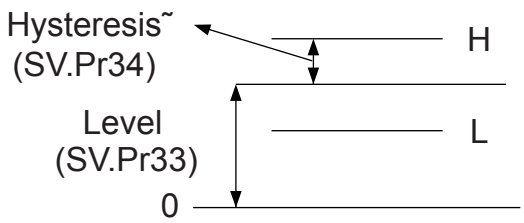

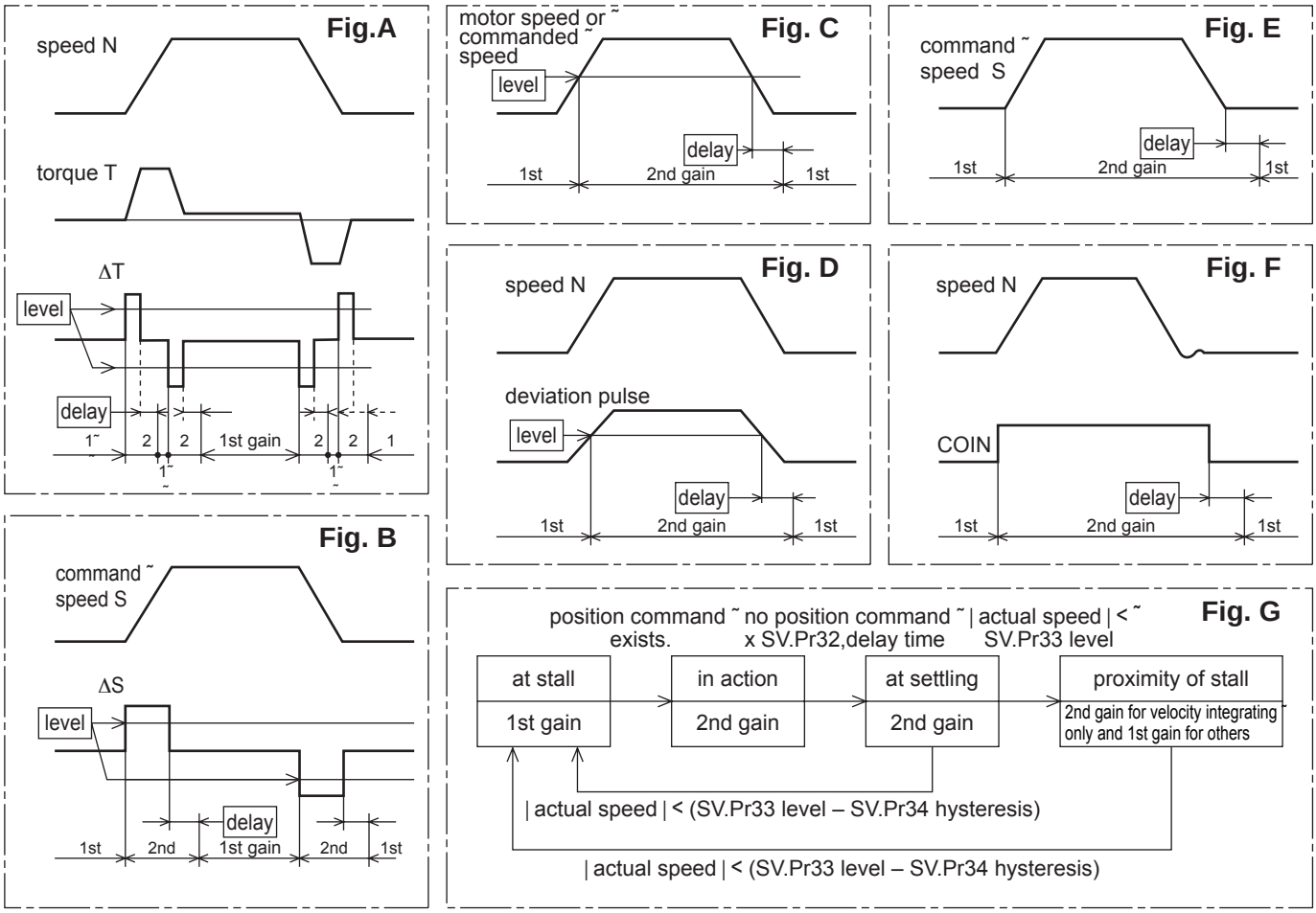

<Caution>

Above Fig. does not reflect a timing lag of gain switching due to hysteresis (SV.Pr34).

Manual Gain Tuning (Basic)

Suppression of Machine Resonance

In case of a low machine stiffness, you cannot set up a higher gain because vibration and noise occur due to oscillation caused by axis distortion or other causes. You can suppress the resonance using two types of filter in these cases.

1. Torque command filter (SV.Pr14 and SV.Pr1C)

Sets up the filter time constant so as to damp the frequency at vicinity of resonance frequency
You can obtain the cut off frequency of the torque command filter in the following formula.
Cut off frequency (Hz) fc = 1 / (2π x parameter setup value x 0.00001)

2. Notch filter

- **Adaptive filter (SV.Pr23, SV.Pr2F)**

MINASA-A4P series feature the adaptive filter. With this filter you can control vibration of the load which resonance points vary by machine by machine and normal notch filter or torque filter cannot respond. The adaptive filter is validated by setting up SV.Pr23 (Adaptive filter mode) to 1.

SV.Pr23	Adaptive filter mode	1 : Adaptive filter is valid.
SV.Pr2F	Adaptive filter frequency	Displays the table No, corresponding to adaptive filter frequency (not changeable)

- **1st and 2nd notch filter (SV.Pr1D, 2E, 28, 29 and 2A)**

MINASA-A4P series feature 2 normal notch filters. You can adjust frequency and width with the 1st filter, and frequency, width and depth with the 2nd filter.

SV.Pr1D	1st notch frequency	Set up lower a frequency by 10% from the measured one through frequency characteristics analysis of the PANATERM®.
SV.Pr1E	1st notch width selection	Set up according to the resonance characteristics.
SV.Pr28	2nd notch frequency	Set up lower a frequency by 10% from the measured one through frequency characteristics analysis of the PANATERM®.
SV.Pr29	2nd notch width selection	Set up according to the resonance characteristics.
SV.Pr2A	2nd notch depth selection	

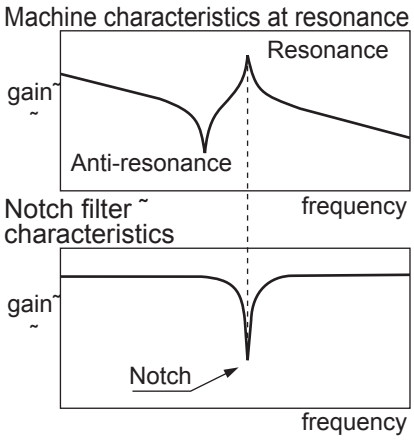

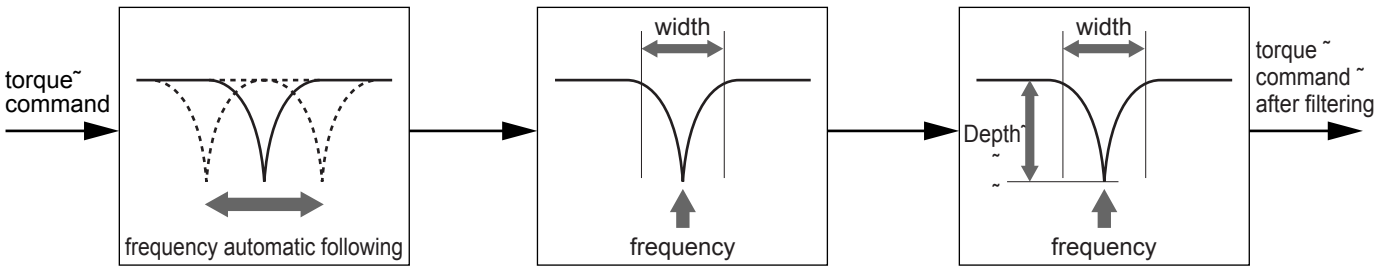

Adaptive filter
(Suppress resonance point instantaneously.)

1st notch filter
(Copying of the setup from the adaptive filter to 1st notch filter is enabled. (refer to P.151))

2nd notch filter
(Adjustment of frequency, width and depth is enabled.)

Example of application machine

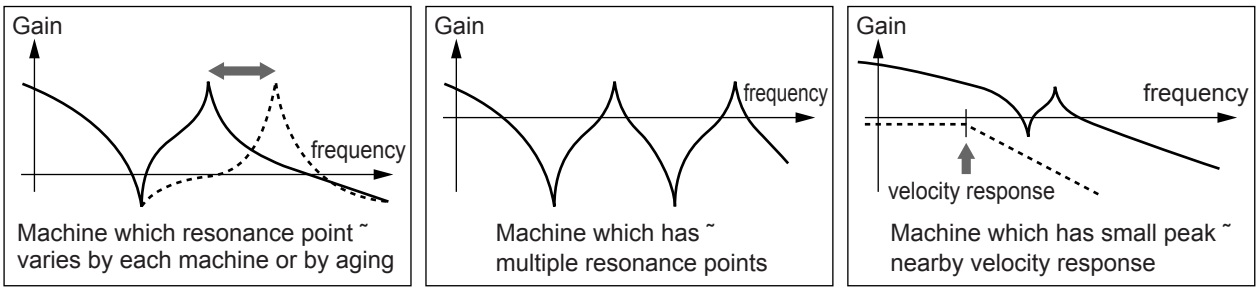

How to Check the Resonance Frequency of the Machine

(1) Start up the Setup Support Software, "PANATERM®" and bring the frequency characteristics measurement screen.
(2) Set up the parameters and measurement conditions. (Following values are standard.)
- Set up SV.Pr11 (1st velocity loop gain) to 25 or so. (to lower the gain and make it easy to identify the resonance frequency)
- Set up the amplitude to 50 (r/min) or so. (not to saturate the torque)
- Make the offset to 100 (r/min) or so. (to increase the speed detecting data and to avoid the measurement error in the vicinity of speed-zero)
- Polarity is made CCW with "+" and CW with "–".
- Setup the sampling rate to 0. (setup range to be 0 to 7.)

(3) Execute the frequency characteristic analysis.

<Remarks>
- Make sure that the revolution does not exceed the travel limit before the measurement.
  Standard revolutions are,
  Offset (r/min) x 0.017 x (sampling rate +1)
  Larger the offset, better measurement result you can obtain, however, revolutions may be increased.
- Set up SV.Pr23 (Adaptive filter mode) to 0 while you make measurement.

<Notes>
- When you set a larger value of offset than the amplitude setup and make the motor run to the one direction at all time, you can obtain a better measurement result.
- Set up a smaller sampling rate when you measure a high frequency band, and a larger sampling rate when you measure a low frequency band in order to obtain a better measurement result.
- When you set a larger amplitude, you can obtain a better measurement result, but noise will be larger. Start a measurement from 50 [r/min] and gradually increase it.

Relation of Gain Adjustment and Machine Stiffness

In order to enhance the machine stiffness,
(1) Install the base of the machine firmly, and assemble them without looseness.
(2) Use a coupling designed exclusively for servo application with high stiffness.
(3) Use a wider timing belt. Belt tension to be within the permissible load to the motor shaft.
(4) Use a gear reducer with small backlash.
- Inherent vibration (resonance frequency) of the machine system has a large effect to the gain adjustment of the servo.
  You cannot setup a higher response of the servo system to the machine with a low resonance frequency (machine stiffness is low).

Manual Gain Tuning (Application)

Instantaneous Speed Observer

Outline

This function enables both realization of high response and reduction of vibration at stopping, by estimating the motor speed using a load model, hence improving the accuracy of the speed detection.

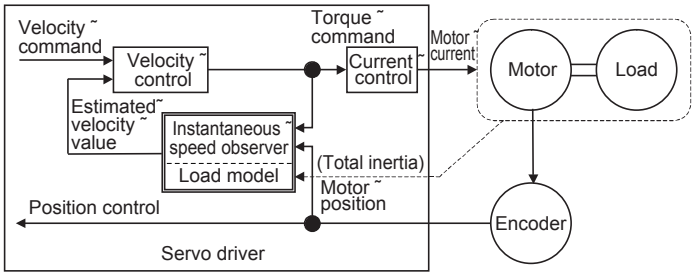

Applicable Range

This function can be applicable only when the following conditions are satisfied.

	Conditions under which the instantaneous speed observer is activated
Control mode	• Control mode to be position control. (SV.Pr02 = 0)
Encoder	• 7-wire absolute encoder

Caution

This function does not work properly or no effect is obtained under the following conditions.

	Conditions which obstruct the instantaneous speed observer effect
Load	• Gap between the estimated total load inertia (motor + load) and actual machine is large. e.g.) Large resonance point exists in frequency band of 300[Hz] or below . Non-linear factor such as large backlash exists. • Load inertia varies. • Disturbance torque with harmonic component is applied.
Others	• Settling range is very small.

How to Use

(1) Setup of inertia ratio (SV.Pr20)

Set up as exact inertia ratio as possible.

- When the inertia ratio (SV.Pr20) is already obtained through real-time auto-gain tuning and is applicable at normal position control, use this value as SV.Pr20 setup value.
- When the inertia ratio is already known through calculation, enter this calculated value.
- When the inertia ration is not known, execute the normal mode auto-gain tuning and measure the inertia ratio.

(2) Adjustment at normal position control

Refer to P.153, "Adjustment at Position Control Mode".

(3) Setup of instantaneous velocity observer (SV.Pr27)

- You can switch the velocity detecting method to instantaneous velocity observer by setting up SV.Pr27 (Velocity observer) to 1.
- When you experience a large variation of the torque waveform or noise, return this to 0, and reconfirm the above cautions and (1).
- When you obtain the effect such as a reduction of the variation of the torque waveform and noise, search an optimum setup by making a fine adjustment of SV.Pr20 (Inertia ratio) while observing the position deviation waveform and actual speed waveform to obtained the least variation. If you change the position loop gain and velocity loop gain, the optimum value of the inertia ratio (SV.Pr20) might have been changed, and you need to make a fine adjustment again.

Damping Control

Outline

This function reduces the vibration by removing the vibration frequency component from the command when the load end of the machine vibrates.

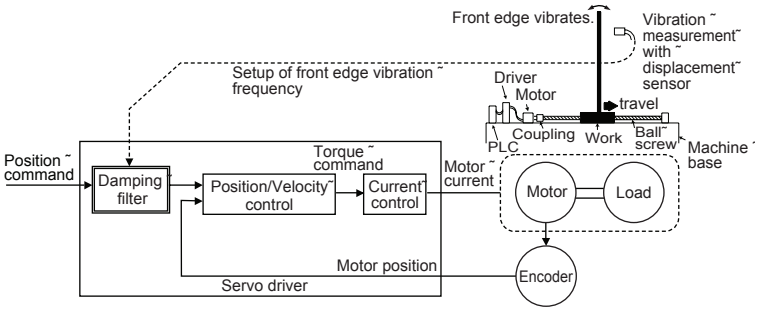

Applicable Range

This function can only be applicable when the following conditions are satisfied.

	Conditions under which the damping control is activated
Control mode	• Control mode to be either or both position control or/and full-closed control. SV.Pr02 = 0 : Position control SV.Pr02 = 6 : Full-closed control

Caution

When you change the parameter setup or switch with VS-SEL, stop the action first then execute.

This function does not work properly or no effect is obtained under the following conditions.

	Conditions which obstruct the damping control effect
Load	• Vibration is triggered by other factors than command (such as disturbance). • Ratio of resonance frequency and anti-resonance frequency is large. • Vibration frequency is out of the range of 10.0 to 200.0 [Hz].

How to Use

(1) Setup of damping frequency (1st : SV.Pr2B, 2nd : SV.Pr2D)

Measure the vibration frequency of the front edge of the machine. When you use such instrument as laser displacement meter, and can directly measure the load end vibration, read out the vibration frequency from the measured waveform and enter it to SV.Pr2B or SV.Pr2D (2nd vibration suppression frequency).

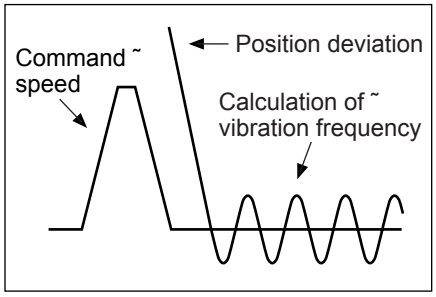

(2) Setup of damping filter (1st : SV.Pr2C, 2nd : SV.Pr2E)

First, set up 0.

You can reduce the settling time by setting up larger value, however, the torque ripple increases at the command changing point as the right fig. shows. Setup within the range where no torque saturation occurs under the actual condition. If torque saturation occurs, damping control effect will be lost.

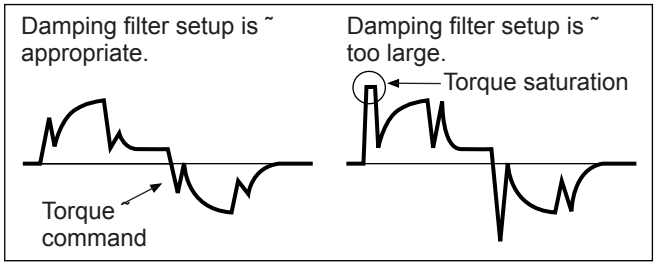

<Remark>

Limit the damping filter setup with the following formula.

10.0 [Hz] – Damping frequency ≦ Damping filter setup ≦ Damping frequency

SV.Pr24	Switching mode
0, 1	No switching (Both of 2 are valid.)
2	Switch with command direction. CCW : 1st damping filter CW : 2nd damping filter

(3) Setup of damping filter switching selection (SV.Pr24)

You can switch the 1st or the 2nd damping filter depending on the vibration condition of the machine.

MEMO

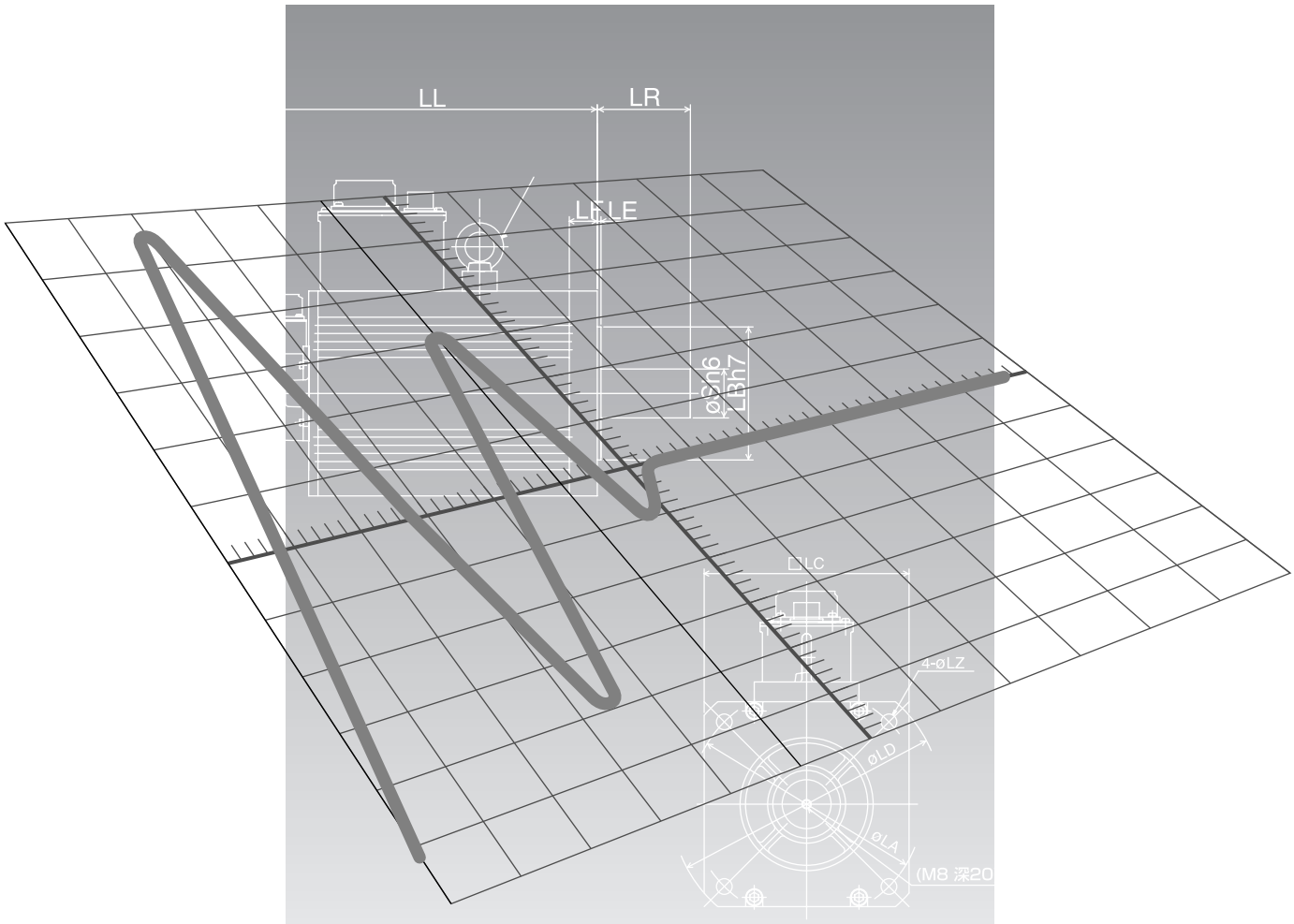

[When in Trouble]

page

When in Trouble 164

What to Check ? 164
Protective Function (What is Error Code ?) 164
Protective Function (Detail of Error Code) 165

Troubleshooting 172

Motor Does Not Run / Motor Stops During an Operation 172
Point Deviates / Positioning Accuracy is Poor 173
Home Position Slips 173
Abnormal Motor Noise or Vibration 173
Overshoot/Undershoot /
Overheating of the Motor (Motor Burn-Out) 174
Parameter Returns to Previous Setup 174
Display of "Communication port or driver cannot be detected"
Appears on the Screen While Using the PANATERM®. 174

When in Trouble

What to Check ?

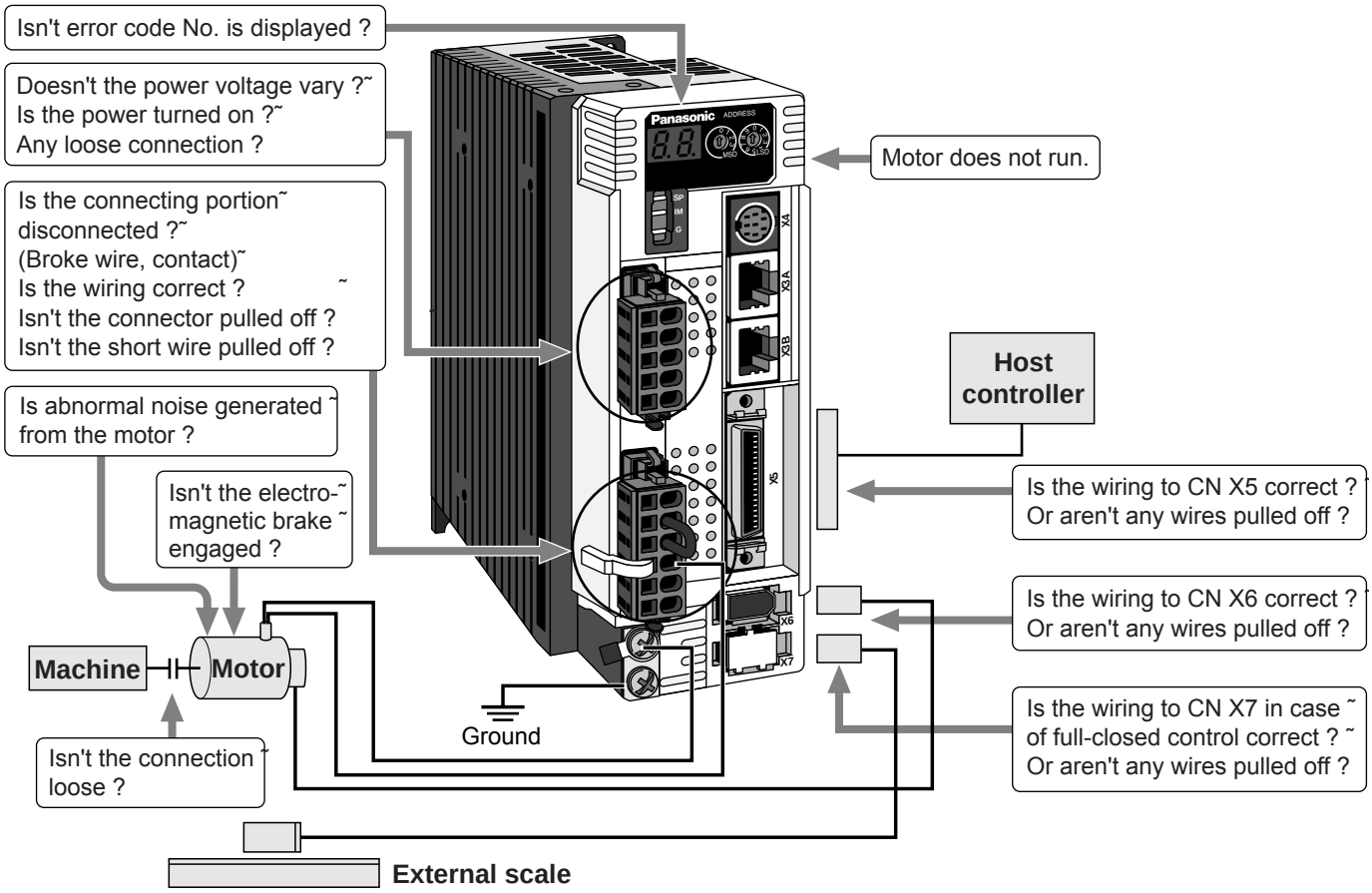

Protective Function (What is Error Code ?)

- Various protective functions are equipped in the driver. When these are triggered, the motor will stall due to error, according to P.133, "Timing Chart (When error occurs)"of Operation Setting, and the driver will turn the Servo-Alarm output (ALM) to off (open).

- Error status ands their measures
  - During the error status, the error code No. will be displayed on the front panel LED, and you cannot turn Servo-ON.
  - You can clear the error status by turning on the alarm clear input for 120ms or longer.
  - When overload protection is triggered, you can clear it by turning on the alarm clear signal 10 sec or longer after the error occurs. You can clear the time characteristics by turning off the connection between L1C and L2C or r and t of the control power supply of the driver.
  - You can clear the above error by operating the console.
    (Refer to P.99, "Alarm Clear Mode" of Setting.)
  - You can also clear the above error by operating the "PANATERM®".

<Remarks>

- When the protective function with a prefix of "*" in the protective function table is triggered, you cannot clear with alarm clear input. For resumption, shut off the power to remove the cause of the error and re-enter the power.
- Following errors will not be stored in the error history.

Control power supply under-voltage protection	(Error code No. 11)
Main power supply under-voltage protection	(Error code No. 13)
EEPROM parameter error protection	(Error code No. 36)
EEPROM check code error protection	(Error code No. 37)
Emergency stop input error protection	(Error code No. 39)
External scale auto recognition error protection	(Error code No. 93)
Motor auto recognition error protection	(Error code No. 95)

Warning Function

- In MINAS-A4P Series, a warning is given before a protection function works and you can check the machine status such as overload in advance.
  When a warning has been given, a warning code below blinks slowly on the 7-segment LED at the front panel.

Warning code number	Warning name	Description
16˜	Overload warning˜	The load has been 85% or more of the overload protection level.˜
18˜	Over-regeneration ˜ load warning˜	The load has been 85% or more of the over-regenerative load protection level.˜ ˜
40˜	Battery warning˜	Voltage of a battery for absolute encoder has been approximately 3.2 V or less.˜
88˜	Fan lock warning˜	A fan has stopped for 1s or more.˜
89	External scale alarm	An external scale temperature has been 65flC or more or signal intensity is insufficient (mounting must be adjusted). This is enabled only for the full-closed control.

- When an overload warning or over-regeneration load warning has been given, referring to the countermeasures taken by relevant protection function.
- When a battery warning has been given, replace the battery for absolute encoder with a new one. When the battery has been replaced, perform Alarm Clear to the servo driver once to clear the battery alarm.

Protective Function (Detail of Error Code)

Protective function	Error code No.	Causes	Measures
Control power supply under-voltage protection	**11**	Voltage between P and N of the converter portion of the control power supply has fallen below the specified value.˜ 1)Power supply voltage is low. Instantaneous power failure has occurred˜ 2)Lack of power capacity...Power supply voltage has fallen down due to inrush current at the main power-on.˜ 3)Failure of servo driver (failure of the circuit)	Measure the voltage between lines of connector (L1C and L2C) and terminal block (r and t).˜ 1)Increase the power capacity. Change the power supply.˜ 2)Increase the power capacity.˜ ˜ 3)Replace the driver with a new one.
Over-voltage protection	**12**	Voltage between P and N of the converter portion of the control power supply has exceeded the specified value˜ 1)Power supply voltage has exceeded the permissible input voltage. Voltage surge due to the phase-advancing capacitor or UPS (Uninterruptible Power Supply) have occurred.˜ 2)Disconnection of the regeneration discharge resistor ˜ ˜ ˜ 3)External regeneration discharge resistor is not appropriate and could not absorb the regeneration energy.˜ 4)Failure of servo driver (failure of the circuit)	Measure the voltage between lines of connector (L1, L2 and L3). ˜ 1)Enter correct voltage. Remove a phase-advancing capacitor.˜ ˜ ˜ 2)Measure the resistance of the external resistor connected between terminal P and B of the driver. Replace the external resistor if the value is ∞.˜ 3)Change to the one with specified resistance and wattage. ˜ 4)Replace the driver with a new one.
Main power supply under-voltage protection	**13**	Instantaneous power failure has occurred between L1 and L3 for longer period than the preset time with SV.Pr6D (Main power-off detection time) while SV.Pr65 (Undervoltage error response at main power-off) is set to 1. Or the voltage between P and N of the converter portion of the main power supply has fallen below the specified value during Servo-ON.˜ 1)Power supply voltage is low. Instantaneous power failure has occurred ˜ ˜ 2)Instantaneous power failure has occurred.˜ ˜ 3)Lack of power capacity...Power supply voltage has fallen down due to inrush current at the main power-on.˜ 4)Phase lack...3-phase input driver has been operated with single phase input.˜ ˜ 5)Failure of servo driver (failure of the circuit)	Measure the voltage between lines of connector (L1, L2 and L3). ˜ ˜ ˜ ˜ ˜ ˜ 1)Increase the power capacity. Change the power supply. Remove the causes of the shutdown of the magnetic contactor or the main power supply, then re-enter the power.˜ 2)Set up the longer time to SV.Pr6D (Main power off detecting time). Set up each phase of the power correctly. ˜ 3)Increase the power capacity. For the capacity, refer to P.32, "Driver and List of Applicable Peripheral Equipments" of Preparation.˜ 4)Connect each phase of the power supply (L1, L2 and L3) correctly. For single phase, 100V and 200V driver, use L1 and L3.˜ 5)Replace the driver with a new one.

When in Trouble

Protective function	Error code No.	Causes	Measures
*** Over-current protection**	**14**	Current through the converter portion has exceeded the specified value.˜ 1)Failure of servo driver (failure of the circuit, IGBT or other components)˜ 2)Short of the motor wire (U, V and W)˜ ˜ ˜ 3)Earth fault of the motor wire˜ ˜ ˜ 4)Burnout of the motor ˜ ˜ 5)Poor contact of the motor wire.˜ ˜ 6)Melting of the relays for dynamic brake due to frequent Servo-ON/OFF operation ˜ 7)The motor is not applicable to the driver.	˜ ˜ 1)Turn to Servo-ON, while disconnecting the motor. If error occurs immediately, replace with a new driver.˜ 2)Check that the motor wire (U, V and W) is not shorted, and check the branched out wire out of the connector. Make a correct wiring connection. ˜ 3)Measure the insulation resistance between motor wires, U, V and W and earth wire. In case of poor insulation, replace the motor.˜ 4)Check the balance of resister between each motor line, and if unbalance is found, replace the motor.˜ 5)Check the loose connectors. If they are, or pulled out, fix them securely. ˜ 6)Replace the driver. Prohibit the run/stop operation with Servo-ON/OFF.˜ 7)Check the name plate and capacity of the motor and driver, and replace with motor applicable to the driver.
*** Over-heat protection**	**15**	Temperature of the heat sink or power device has been risen over the specified temperature. ˜ 1)Ambient temperature has risen over the specified temperature.˜ 2)Over-load	˜ ˜ 1)Improve the ambient temperature and cooling condition.˜ 2)Increase the capacity of the driver and motor.˜ Set up longer acceleration/deceleration time.˜ Lower the load.
Over-load protection	**16**	Torque command value has exceeded the over-load level set with SV.Pr72 (Overload level) and resulted in overload protection according to the time characteristics (described later)˜ 1)Load was heavy and actual torque has exceeded the rated torque and kept running for a long time. ˜ 2)Oscillation and hunching action due to poor adjustment. Motor vibration, abnormal noise. Inertia ratio (SV.Pr20) setup error. ˜ 3)Miswiring, disconnection of the motor. ˜ ˜ ˜ ˜ 4)Machine has collided or the load has gotten heavy. Machine has been distorted. ˜ 5)Electromagnetic brake has been kept engaged.˜ ˜ 6)While wiring multiple axes, miswiring has occurred by connecting the motor cable to other axis.˜ 7)SV.Pr72 setup has been low.	Check that the torque (current) does not oscillates nor fluctuate up an down very much on the graphic screen of the PANATERM®. Check the over-load alarm display and load factor with the PANATERM®.˜ 1)Increase the capacity of the driver and motor. Set up longer acceleration/deceleration time. Lower the load.˜ 2)Make a re-adjustment.˜ ˜ ˜ 3)Make a wiring as per the wiring diagram. Replace the cables. Connect the black (W phase), ˜ white (V phase) and red (U phase) cables in sequence from the bottom at the CN X2 connector.˜ 4)Remove the cause of distortion. Lower the load.˜ ˜ 5)Measure the voltage between brake terminals. Release the brake ˜ 6)Make a correct wiring by matching the correct motor and encoder wires.˜ 7)Set up SV.Pr72 to 0. (Set up to max. value of 115% of the driver)
*** Over-regeneration load protection**	**18**	Regenerative energy has exceeded the capacity of regenerative resistor. ˜ ˜ 1)Due to the regenerative energy during deceleration caused by a large load inertia, converter voltage has risen, and the voltage is risen further due to the lack of capacity of absorbing this energy of the regeneration discharge resistor.˜ 2)Regenerative energy has not been absorbed in the specified time due to a high motor rotational speed. ˜ ˜ 3)Active limit of the external regenerative resistor has been limited to 10% duty.	Check the load factor of the regenerative resistor on the monitor screen of the PANATERM®. Do not use in the continuous regenerative brake application.˜ 1) Improve the regenerative processing capability, e.g., increase the motor and driver capacity, put external regenerative resistor, etc.˜ ˜ 2) Reduce the regenerative energy at deceleration, e.g., lower the motor rotation speed, make the deceleration time longer, etc.˜ 3) If SV.Pr6C (External regenerative resistor set up) is “0” and an internal regenerative resistor is used, and if SV.Pr6C is “3” and an external regenerative resistor is not used, use the external regenerative resistor and try to set SV.Pr6C to “1”.˜ If the external regenerative resistor is used and SV.Pr6C is set to “1”, secure any external over-regeneration load protection measures and try to set SV.Pr6C to “2”.

<Remarks>˜
Install an external protection such as thermal fuse without fail when you set up SV.Pr6C to 2. Otherwise, regenerative resistor loses the protection and it may be heated up extremely and may burn out.

Protective function	Error code No.	Causes	Measures
*** Encoder communi-cation error protection**	**21**	Communication between the encoder and the driver has been interrupted in certain times, and disconnection detecting function has been triggered.	• Make a wiring connection of the encoder as per the wiring diagram. Correct the miswiring of the connector pins. Note that the encoder cable to be connected to CN X6. (Check that the encoder cable is not connected to the connector CN X7 for external scale connection by mistake.)˜ • Secure the power supply for the encoder of DC5V±5% (4.75 to 5.25V)...pay an attention especially when the encoder cables are long.˜ • Separate the encoder cable and the motor cable if they are bound together.˜ • Connect the shield to FG...Refer to P.38, "Wiring to the Connector, CN X6" of Preparation.
*** Encoder communi-cation data error protection**	**23**	Communication error has occurred in data from the encoder. Mainly data error due to noise. Encoder cables are connected, but communication data has some errors.	
Position deviation excess protection	**24**	Deviation pulses have exceeded the setup of SV.Pr70 (Position deviation error level). ˜ 1)The motor movement has not followed the command.˜ ˜ ˜ ˜ ˜ ˜ ˜ ˜ 2)Setup value of SV.Pr70 (Position deviation error level) is small.	˜ ˜ 1)Check that the motor follows to the position command. Check that the output toque has not saturated in torque monitor. Make a gain adjustment. Set up maximum value to SV.Pr5E (1st torque limit) and SV.Pr5F (2nd torque limit). Make a encoder wiring as per the wiring diagram. Set up the longer acceleration/deceleration time. Lower the load and speed.˜ 2)Set up a larger value to SV.Pr70, or set up 0 (invalid).
*** Hybrid deviation excess error protection**	**25**	Position of load by the external scale and position of the motor by the encoder slips larger than the setup pulses with SV.Pr7B (Setup of hybrid deviation excess) at full-closed control.	• Check the connection between the motor and the load. Check the looseness, slippage and backlash.˜ • Check the connection between the external scale and the driver. ˜ • Check that the variation of the motor position (encoder feedback value) and the load position (external scale feedback value) is the same sign when you move the load.˜ • Check that the numerator and denominator of the external scale division (SV.Pr78, 79 and 7A) and reversal of external scale direction (SV.Pr7C) are correctly set.
Over-speed protection	**26**	The motor rotational speed has exceeded the setup value of SV.Pr73 (Over-speed level setup)	• Do not give an excessive speed command.˜ • Make a gain adjustment when an overshoot has occurred due to a poor gain adjustment.
*** External scale com-munication data error protection**	**28**	Communication error has occurred in data from the encoder. The data could be received normally, but an error occurred in the data due to noise.	• Separate the encoder cable and the motor cable if they are bound together. ˜ • Connect the shield to FG...refer to wiring diagram.
Deviation counter overflow protection	**29**	Deviation counter value has exceeded 2^{27} (134217728).	• Check that the motor runs as per the position com-mand.˜ • Check that the output toque has not saturated in torque monitor.˜ • Make a gain adjustment.˜ • Set up longer acceleration/deceleration time. Lower the load and speed.
Software limit protection	**34**	The motor exceeded an allowable motor operation range specified by SV.Pr26 (software limit setup) against the position command input range.˜ 1)Gain has not matched up.˜ ˜ 2)Setup value of SV.Pr26 (Software limit setup) is small.	Refer to P.170,"Software Limit Function" before using this.˜ ˜ 1)Check the gain (balance of position loop gain and ve-locity loop gain) and the inertia ratio.˜ 2)Setup a larger value to SV.Pr26. Otherwise, set SV.Pr26 to “0” and disable the software limit protection.

<Remarks>

When the protective function with a prefix of "*" in the protective function table is triggered, you cannot clear with alarm clear input.

Protective function	Error code No.	Causes	Measures
*** External scale communication error protection**	**35**	Communication between the external scale and the driver has been interrupted in certain times, and disconnection detecting function has been triggered.	• Make a wiring connection of the external scale as per the wiring diagram. ˜ • Correct the miswiring of the connector pins. ˜ • Secure the power supply voltage DC 5 V±5% (4.75 to 5.25 V) for the external scale ... pay attention especially when the external scale connection cables are long.
*** EEPROM parameter error protection**	**36**	Data in parameter storage area has been damaged when reading the data from EEPROM at power-on.	• Set up all parameters again.˜ • If the error persists, replace the driver (it may be a failure.) Return the product to the dealer or manufacturer.
*** EEPROM check code error protection**	**37**	Data for writing confirmation to EEPROM has been damaged when reading the data from EEPROM at power-on.	Replace the driver. (it may be a failure). Return the product to a dealer or manufacturer.
Emergency stop input error protection	**39**	When the emergency stop input (EMG-STP: CN X5 Pin 2) has turned off, the system trips regarding it as an error.	• Check the switch power supply and cable connected to the emergency stop input for error.˜ • Check that the emergency stop input (CN X5 Pin 2) turns on.˜ • Check that the rising time of the control signal cable (DC 12 to 24 V) at the power supply on is not slower than that of the servo driver.
Absolute system down error protection	**40**	Voltage of the built-in capacitor has fallen below the specified value because the power supply or battery for the 17-bit absolute encoder has been down.	After connecting the power supply for the battery, clear the absolute encoder. (Refer to P.138, "Setup (Initialization) of Absolute Encoder" of Operation Setting.) You cannot clear the alarm unless you clear the absolute encoder.
*** Absolute counter over error protection**	**41**	Multi-turn counter of the 17-bit absolute encoder has exceeded the specified value.	• Set up an appropriate value to SV.Pr0B (Absolute encoder set up) .˜ • Limit the travel from the machine home position within 32767 revolutions.
Absolute over-speed error protection	**42**	The motor speed has exceeded the specified value when only the supply from the battery has been supplied to 17-bit encoder during the power failure.	• Check the supply voltage at the encoder side (5V±5%)˜ • Check the connecting condition of the connector, CN X6. ˜ • You cannot clear the alarm unless you clear the absolute encoder.
*** Absolute single turn counter error protection**	**44**	Single turn counter error of 17-bit absolute encoder has been detected.˜ Single turn counter error of 2500[P/r], 5-wire serial encoder has been detected.	Replace the motor.
*** Absolute multi-turn counter error protection**	**45**	Multi turn counter error of 17-bit absolute encoder has been detected.˜ Multi turn counter error of 2500[P/r], 5-wire serial encoder has been detected.	Replace the motor.
Absolute status error protection	**47**	17-bit absolute encoder has been running at faster speed than the specified value at power-on.	Arrange so as the motor does not run at power-on.
*** Encoder Z-phase error protection**	**48**	Missing pulse of Z-phase of 2500[P/r], 5-wire serial encoder has been detected	The encoder might be a failure. Replace the motor.
*** Encoder CS signal error protection**	**49**	CS signal logic error of 2500[P/r], 5-wire serial encoder has been detected	The encoder might be a failure. Replace the motor.

<Remarks>

When the protective function with a prefix of "*" in the protective function table is triggered, you cannot clear with alarm clear input.

Protective function	Error code No.	Causes	Measures
*External scale status 0 error protection	50	Bit 0 of the external scale error code (ALMC) has been turned to 1.˜ Check the specifications of the external scale.	Remove the causes of the error, then shut off the power to reset.
*External scale status 1 error protection	51	Bit 1 of the external scale error code (ALMC) has been turned to 1.˜ Check the specifications of the external scale.	
*External scale status 2 error protection	52	Bit 2 of the external scale error code (ALMC) has been turned to 1.˜ Check the specifications of the external scale.	
*External scale status 3 error protection	53	Bit 3 of the external scale error code (ALMC) has been turned to 1.˜ Check the specifications of the external scale.	
*External scale status 4 error protection	54	Bit 4 of the external scale error code (ALMC) has been turned to 1.˜ Check the specifications of the external scale.	
*External scale status 5 error protection	55	Bit 5 of the external scale error code (ALMC) has been turned to 1.˜ Check the specifications of the external scale.	
Homing error protection	68	An error occurred during homing.˜ An invalid over-travel inhibit input signal was input.˜ A parameters necessary for homing operation is not set or an invalid value is set.	• Check the switch, limit sensor, cable and power supply connected to the over-travel inhibit input (CCWL/CWL: CN X5 Pin 19/20) for error.˜ • Check the parameter settings for homing.˜ • For details, refer to “Homing Operation” in “Operation Setting” on page 114.
Undefined data error protection	69	A parameters necessary for an instructed step operation and jog operation is not set or an invalid value is set.	Check the settings of positioning parameter and step parameter. For details, refer to “Step Operation” in “Operation Setting” on page 107 and “Jog Operation” on page 112.
*** Present position overflow error protection**	70	A current position (–2147483647 to 2147483647) overflowed when 16.Pr51 (wraparound accepted) is “0”.	Do not give an unsuitable operation command to make the current position exceed “–2147483647 to 2147483647”.˜ Especially, pay attention to an incremental operation, jog operation and home offset operation.
Drive prohibition detection error protection	71	Over-travel inhibit input in an operating direction was detected in a step operation and jog operation after homing completes.˜ Both of CCW over-travel inhibit input (CCWL: CN X5 Pin 19) and CW over-travel inhibit input (CWL: CN X5 Pin 20) were in the OPEN state.	• Check the switch, limit sensor, cable and power supply connected to the over-travel inhibit input (CCWL/CWL) for error.˜ • Check the operation command and the mount of limit sensor.˜ • Check that a direction of home offset operation is not the same as that of over-travel inhibit input.
*** Maximum movement limit error protection**	72	A motor command position exceeded a maximum travel limit range in a step operation and jog operation after homing completes.	• Do not give an unsuitable operation command to make the command position exceed the maximum travel limit range. Especially, pay attention to an incremental operation, jog operation and home offset operation.˜ • Check a set value of 32.Pr01 (setting of maximum travel in positive direction) and 32.Pr02 (setting of maximum travel in negative direction)
*** ID setting error protection**	82	The ID set value exceeds a range between 0 and 31.	Check the setting of the rotary switch on the front panel.
*** External scale auto recognition error protection**	93	An unsupported external scale is connected.	Replace it with a supported external scale.
*** Motor auto recognition error protection**	95	The motor and the driver has not been matched.	Replace the motor which matches to the driver.
*** Other error**	Other No. hh HH 77	Control circuit has malfunctioned due to excess noise or other causes.˜ Some error has occurred inside of the driver while triggering self-diagnosis function of the driver.	• Turn off the power once, then re-enter.˜ • If error repeats, this might be a failure.˜ Stop using the products, and replace the motor and the driver. Return the products to the dealer or manufacturer.

CTi Automation - Phone: 800.894.0412 - Fax: 208.368.0415 - Web: www.ctiautomation.net - Email: info@ctiautomation.net

• Time characteristics of Err16 (Overload protection)

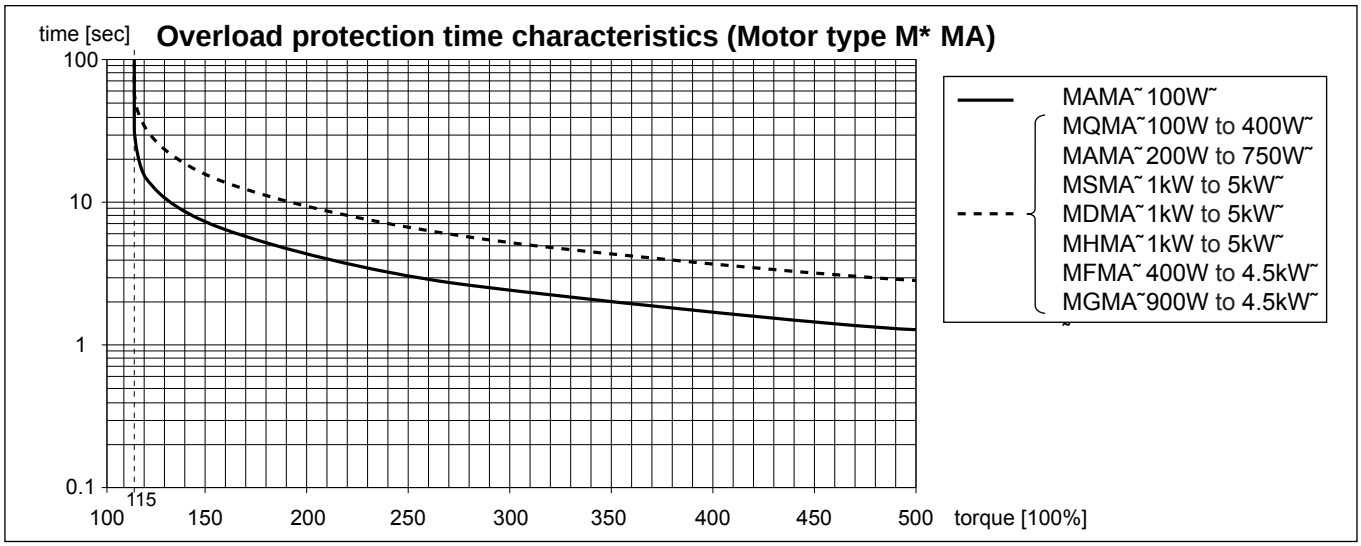

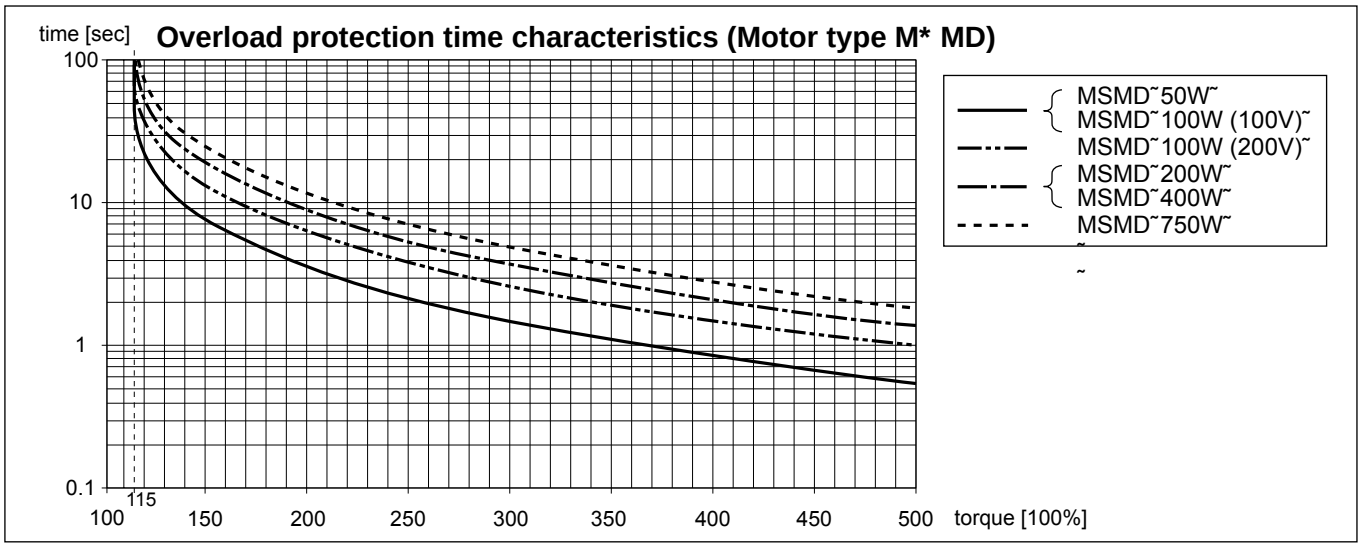

• Software Limit Function

1) Outline

You can make an alarm stop of the motor with software limit protection (Error code No.34) when the motor travels exceeding the movable range which is set up with SV.Pr26 (Software limit set up) against the position command input range.

You can prevent the work from colliding to the machine end caused by motor oscillation.

2) Applicable range

This function works under the following conditions.

	Conditions under which the software limit works
Control mode	• Either at position control mode or full-closed control mode˜ SV.Pr02 = 0 : Position control˜ SV.Pr02 = 6 : Full-closed control ˜
Others	(1) operating Normal auto tuning˜ (2) After the last clearance of the position command input range (0 clearance), the movable range of the motor is within 2147483647 for both CCW and CW direction. ˜ (3) at Servo-ON˜ (2) when SV.Pr26 (Software limit setup) is other than 0. ˜ Once the motor gets out of the (2) condition, the software limit protection will be invalidated until the later mentioned "5) Condition under which the position command input range is cleared" is satisfied. The position command input range will be 0-cleared when the motor gets out of the conditions of (3) and (4).

3) Cautions

- This function is not a protection against the abnormal position command.
- When this software limit protection is activated, the motor decelerates and stops according to SV.Pr68 (Error response action).
  The work (load) may collide to the machine end and be damaged depending on the load during this deceleration, hence set up the range of SV.Pr26 including the deceleration movement.
- This software limit protection will be invalidated during the trial run and frequency characteristics functioning of the PANATERM®.

4) Example of movement

(1) When no position command is entered (Servo-ON status),

The motor movable range will be the travel range which is set at both sides of the motor with SV.Pr26 since no position command is entered. When the load enters to the Err34 occurrence range (oblique line range), software limit protection will be activated.

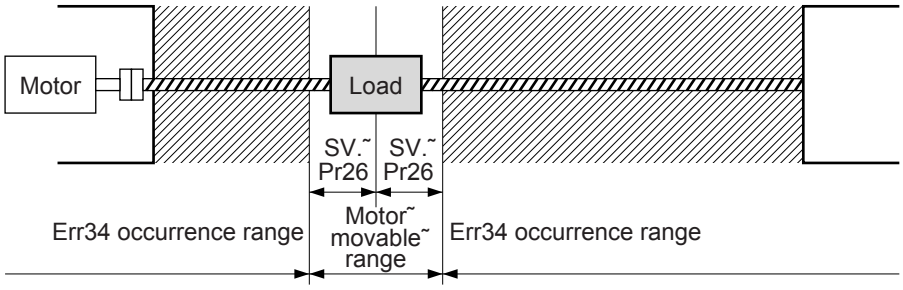

(2) When the load moves to the right (at Servo-ON),

When the position command to the right direction is entered, the motor movable range will be expanded by entered position command, and the movable range will be the position command input range + SV.Pr26 setups in both sides.

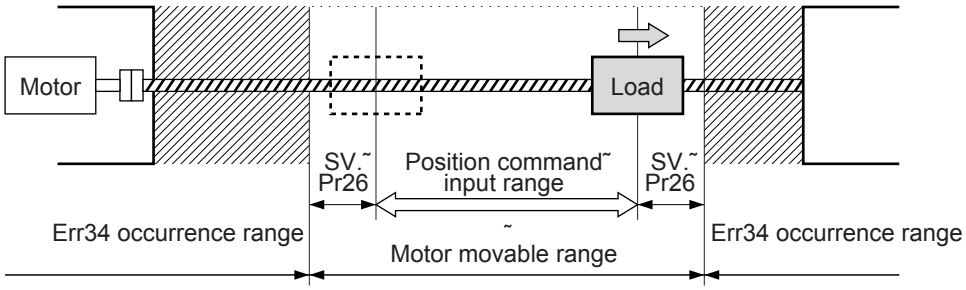

(3) When the load moves to the left (at Servo-ON),

When the position command to the left direction, the motor movable range will be expanded further.

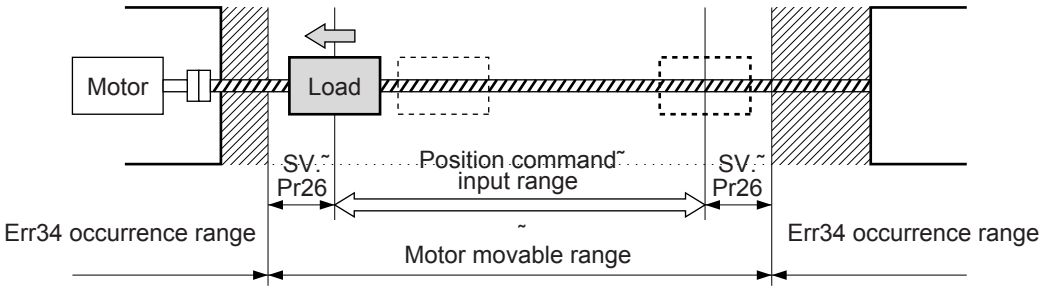

5) Condition under which the position command input range is cleared

The position command input range will be 0-cleared under the following conditions.

- When the power is turned on.
- When the homing is completed.
- At the starting and the finishing of the normal auto-gain tuning.

Troubleshooting

Motor Does Not Run Motor Stops During an Operation

Classification	Causes		Countermeasures
Parameter	Error in control mode setting˜	The setting of the control mode in the console or the monitor mode of "PANATERM®" may be wrong.˜	Set SV.Pr02 (Control mode) again.˜ ˜
	Error in torque limit setting˜	The torque limit may be smaller than correct torque necessary for an operation.˜	Check the setting of SV.Pr5E (1st torque limit) and SV.Pr5F (2nd torque limit).˜
	Error in operation parameter setting˜ ˜ ˜	A parameter necessary for an operation may not be set.˜ (If any parameter is not set, the error code No. 68 or 69 is shown.)˜ ˜	Check the parameters of travel, speed acceleration/deceleration time necessary for homing operation or step operation in 16.Pr.˜
	Setting out of a maximum travel range of target position˜	An operation command may exceed the maximum travel range in a positive direction and/or negative direction.˜	Check the set value of 32.Pr01/02.˜ ˜ ˜
	Error in a parameter used by a manufacturer.˜	The setting of parameter used by a manufacturer may be changed from a default setting.˜	Initialize all the parameters once and set them again.˜
Wiring	Main power supply (L1, L2 and/or L3) of CN X1 and/or control power supply (L1C and/or L2C) does not turn on. Otherwise, a voltage value is wrong.˜	Voltage of the main power supply and/or control power supply may not be correct.˜ The error code No. 11, 12 and/or 13 may occur.˜ ˜ ˜ ˜ ˜	Check the wiring and voltage of the main power supply (L1, L2 and/or L3) of CN X1 and/or the control power supply (L1C and/or L2C).˜ ˜ ˜ ˜
	Servo-on input (SRV-ON) of CN X5 is opened.˜	The 7-segment LED on the front panel may show [--].˜ The servo-on signal may be in the [--] state in the monitor mode of the console or "PANATERM®".˜	Check and wire the input signal so that the SRV-ON input can be connected to COM–.˜
	CW/CCW over-travel inhibit input (CWL/CCWL) of CN X5 is in the ON state.˜ ˜	The CW/CCW over-travel inhibit input (CWL/CCWL) of CN X5 may be in the ON state. ("Enable/disable" and logic are set by SV.Pr53/54.)˜ The CW/CCW over-travel inhibit input may be in the [--] state in the monitor mode of the console or "PANATERM®".˜	Check the wiring of CW/CCW over-travel inhibit input and check the set value in SV.Pr53/54.˜ ˜ ˜
	Strobe input (STB) of CN X5 is opened.˜ ˜	The strobe input (STB) of CN X5 may remain opened.˜ The strobe input signal may be in the [--] state in the monitor mode of the console or "PANATERM®".˜	Check and wire the input signal so that the strobe input can be connected to COM–.˜
	Emergency stop input (EMG-STP) of CN X5 is opened.˜	The emergency stop input (EMG-STP) of CN X5 may be opened. (The error code No. 39 is shown.)˜ ˜	Check and wire the input signal so that EMG-STP can be connected to COM–.˜ ˜
	Error in the point specifying input (P1IN to P32IN) of CN X5.˜ ˜ Error in input timing of	The point specifying input (P1IN to P32IN) of CN X5 may not be input correctly. (Logic can be set by SV.Pr58.)˜ The state of P1IN to P32IN may not be displayed correctly in the monitor mode of the console or "PANATERM®".˜	Check the wiring of P1IN to P32IN.˜ ˜ ˜ ˜ ˜
	the strobe input (STB) and the point specifying input (P1IN to P32IN) of CN X5.˜ A stop instruction is	Waiting time from the input of the point specifying input (P1IN to P32IN) of CN X5 to the input of the strobe input (STB) of CN X5 may not be 10 ms or more. (If the waiting time is less than 10 ms, a target point may be unstable.)˜	Insert waiting time of 10 ms or more.˜ ˜ ˜ ˜ ˜
	input by the multi function input 1/2 (EX-IN1/EX-IN2) of CN X5.˜ Homing not completed˜ ˜	The deceleration-and-stop, emergency stop and temporary stop, which are assigned to the multi function input 1/2 (EX-IN1/EX-IN2) of CN X5, may turn on.˜ (Function selection and logic can be set by SV.Pr5A/5C and SV.Pr59/5B, respectively.)˜	Check the setting and wiring of the multi function input 1/2.˜ ˜ ˜ ˜
Others	˜ During the execution of an operation com-	Homing may not be completed.˜ The point output may be "0" in the monitor mode of the console or "PANATERM®".˜	Complete the homing.˜ Refer to page 114.˜ ˜
	mand, the next operation command starts.˜ The motor shaft drags.˜ The motor does not	During the execution of an operation command (a transistor of the motor operation state output BUSY of CN X5 turns OFF), you may start the next operation command.˜	Check that the transistor of the motor operation state output turns ON and then start the next operation command.˜ ˜
	run.	The motor shaft drags. The motor does not run.˜ 1)After turning the power supply off and separating it from the machine, the motor shaft may not be rotated manually.˜ 2)For the motor equipped with electromagnetic brake, the motor shaft may not be rotated manually if DC 24 V is applied to the brake.	If the motor shaft cannot be rotated, ask the local shop to repair the motor.˜ ˜

Point Deviates / Positioning Accuracy is Poor

Classification	Causes	Countermeasures
Parameter	The setting of the parameter for positioning operation is wrong.˜	Adjust the target position parameter at each point.˜ Check the setting of an operation mode (relative travel/absolute travel).˜
	The setting of positioning completion range is large.˜	Decrease the set value of the positioning completion range (SV.Pr60) to the extent that chattering does not occur.˜
	Position loop gain is small.˜ ˜ ˜ ˜	Check the position deviation in the monitor mode of the console or "PANATERM®".˜ Increase the set value of SV.Pr10 to the extent that oscillation does not occur and check it.˜
Wiring	Each input signal of CN X5 is chattering.˜ 1)Servo-ON signal˜ 2)CW/CCW over-travel inhibit input˜ 3)Multi function input 1/2˜ (when a stop command is set)˜ 4)Strobe signal input˜ 5)Point specifying input˜	Check the wiring and connection between each signal of the connector CN X5 and COM–.˜ ˜ ˜ ˜ ˜ ˜
Installation	Load inertia is large.	Check the overshoot when stopping with a graphic function of "PANATERM®". If this problem is not resolved by gain adjustment, increase the motor and driver capacity.

Home Position Slips

Classification	Causes	Countermeasures
Parameter	The homing speed is slow, if any of the homing types below is used.˜ 16.Pr36 =˜ 1:Home sensor (based on the front end)˜ 4: Limit sensor˜	Review the set value of the homing speed (16.Pr30/31).˜ ˜ ˜ ˜ ˜
Wiring	Chattering of home sensor (Z-LS) input. ˜ ˜ ˜	Check home sensor input signal of the controller with oscilloscope. ˜ Review the wiring near to proximity dog and make a noise measure or reduce noise. ˜
	Noise is on the encoder line.	Reduce noise (installation of noise filter or ferrite core), shield treatment of I/F cables, use of a twisted pair or separation of power and signal lines.

Abnormal Motor Noise or Vibration

Classification	Causes	Countermeasures
Adjustment	Gain setup is large. ˜ ˜	Lower the gain by setting up lower values to SV.Pr11 and 19, of velocity loop gain and SV.Pr10 and 18 of position loop gain.˜
Installation	Resonance of the machine and ˜ the motor. ˜ ˜ ˜	Re-adjust SV.Pr14 and 1C (Torque filter). Check if the machine resonance exists or not with frequency characteristics analyzing function of the PANATERM®. Set up the notch frequency to SV.Pr1D or SV.Pr28 if resonance exists. ˜
	Motor bearing˜ ˜ ˜	Check the noise and vibration near the bearing of the motor while running the motor with no load. Replace the motor to check. Request for repair. ˜
	Electro-magnetic sound, gear noise, rubbing noise at brake engagement, hub noise or rubbing noise of encoder	Check the noise of the motor while running the motor with no load. Replace the motor to check. Request for repair.

CTi Automation - Phone: 800.894.0412 - Fax: 208.368.0415 - Web: www.ctiautomation.net - Email: info@ctiautomation.net

Troubleshooting

Overshoot/Undershoot

Overheating of the Motor (Motor Burn-Out)

Classification	Causes	Countermeasures
Adjustment	Gain adjustment is not proper.˜ ˜ ˜	Check with graphic function of PANATERM® or velocity monitor (SP) or torque monitor (IM). Make a correct gain adjustment. Refer to P.142 of Adjustment.˜
Installation	Load inertia is large.˜ ˜ ˜	Check with graphic function of PANATERM® or velocity monitor (SP) or torque monitor (IM). Make an appropriate adjustment. Increase the motor and driver capacity and lower the inertia ratio. Use a gear reducer. ˜
	Looseness or slip of the machine˜ ˜	Review the mounting to the machine.˜ ˜
	Ambient temperature, environment ˜ ˜	Lower the temperature with cooling fan if the ambient temperature exceeds the predications.˜
	Stall of cooling fan, dirt of fan ventilation duct˜ ˜	Check the cooling fans of the driver and the machine. Replace the driver fan or request for repair.˜
	Mismatching of the driver and the motor ˜	Check the name plates of the driver and the motor. Select a correct combination of them referring to the instruction manual or catalogue. ˜
	Failure of motor bearing˜ ˜ ˜	Check that the motor does not generate rumbling noise while turning it by hand after shutting off the power. Replace the motor and request for repair if the noise is heard. ˜
	Electromagnetic brake is kept engaged (left un-released).˜	Check the voltage at brake terminals. Apply the power (DC24V) to release the brake. ˜
	Motor failure (oil, water or others)˜ ˜	Avoid the installation place where the motor is subject to high temperature, humidity, oil, dust or iron particles. ˜
	Motor has been turned by external force while dynamic brake has been engaged.	Check the running pattern, working condition and operating status, and inhibit the operation under the condition of the left.

Parameter Returns to Previous Setup

Classification	Causes	Countermeasures
Parameter	No writing to EEPROM has been carried out before turning off the power.	Refer to P.96, "How to Operate-EEPROM Writing" of Preparation.

Display of "Communication port or driver cannot be detected" Appears on the Screen While Using the PANATERM®.

Classification	Causes	Countermeasures
Wiring	Communication cable (for RS232C) is connected to the connector, CN X3.	Connect the communication cable (for RS232C) to connector, CN X4.

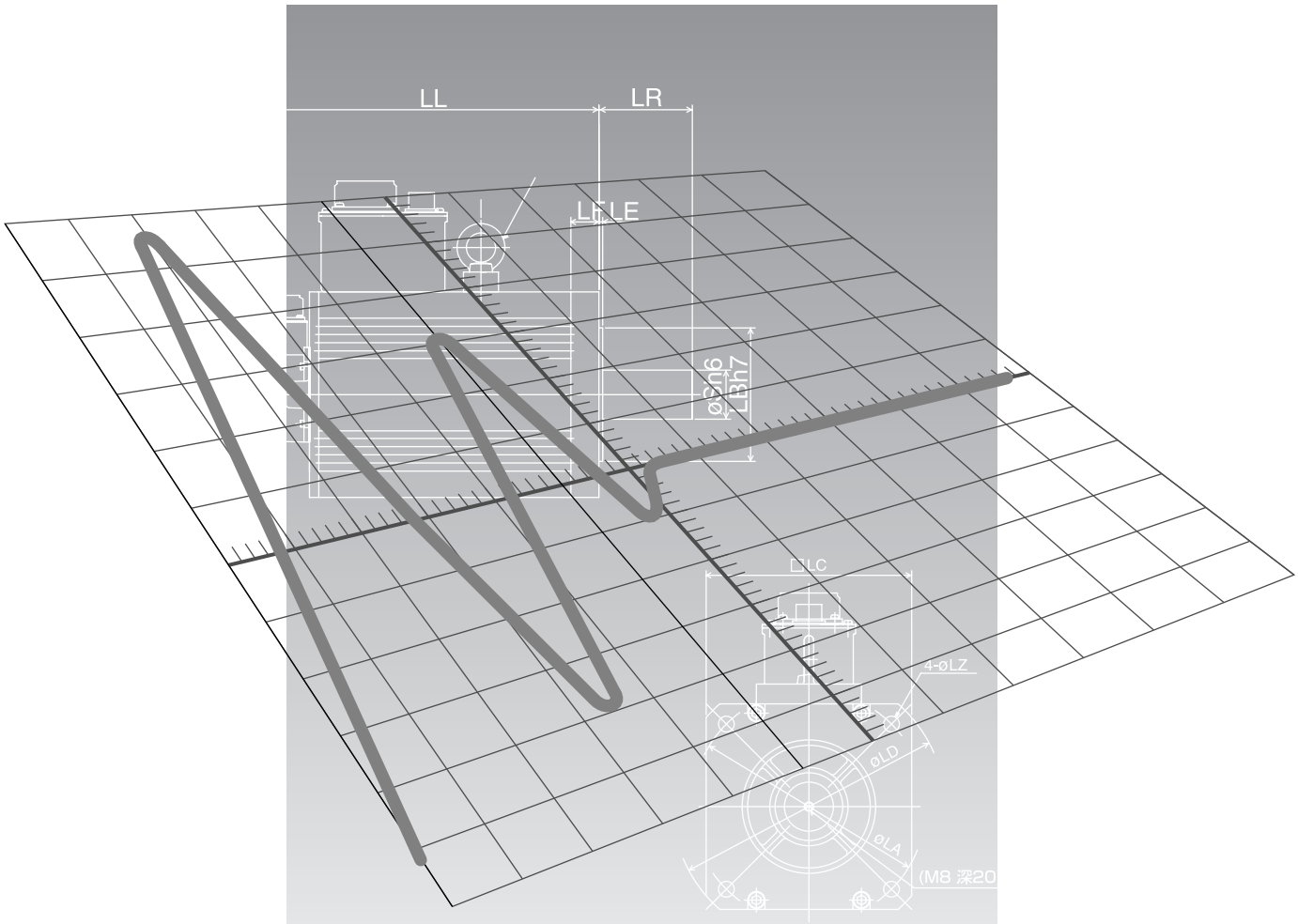

[Supplement]

page

Conformity to EC Directives and UL Standards 176
Options 180
Recommended components 191
Dimensions (Driver) 192
Dimensions (Motor) 195
Permissible Load at Output Shaft 210
Motor Characteristics (S-T Characteristics) 211
Motor with Gear Reducer 217
Dimensions/Motor with Gear Reducer 218
Permissible Load at Output Shaft/Motor with Gear Reducer 220
Characteristics of Motor with Gear Reducer 221
Block Diagram of Driver 222
Block Diagram by Control Mode 224
Specifications (Driver) 226
Default Parameters
(for all the models of A4P Series) 228

Conformity to EC Directives and UL Standards

EC Directives

The EC Directives apply to all such electronic products as those having specific functions and have been exported to EU and directly sold to general consumers. Those products are required to conform to the EU unified standards and to furnish the CE marking on the products.
However, our AC servos meet the relevant EC Directives for Low Voltage Equipment so that the machine or equipment comprising our AC servos can meet EC Directives.

EMC Directives

MINAS Servo System conforms to relevant standard under EMC Directives setting up certain model (condition) with certain locating distance and wiring of the servo motor and the driver. And actual working condition often differs from this model condition especially in wiring and grounding. Therefore, in order for the machine to conform to the EMC Directives, especially for noise emission and noise terminal voltage, it is necessary to examine the machine incorporating our servos.

Conformed Standards

Subject	Conformed Standard		
Motor	IEC60034-1 IEC60034-5 UL1004 CSA22.2 No.100		Conforms to Low-Voltage Directives
Motor/ Motor and driver	EN50178 UL508C		
	EN55011	Radio Disturbance Characteristics of Industrial, Scientific and Medical (ISM) Radio-Frequency Equipment	Standards referenced by EMC Directives
	EN61000-6-2	Immunity for Industrial Environments	
	IEC61000-4-2	Electrostatic Discharge Immunity Test	
	IEC61000-4-3	Radio Frequency Electromagnetic Field Immunity Test	
	IEC61000-4-4	Electric High-Speed Transition Phenomenon/Burst Immunity Test	
	IEC61000-4-5	Lightening Surge Immunity Test	
	IEC61000-4-6	High Frequency Conduction Immunity Test	
	IEC61000-4-11	Instantaneous Outage Immunity Test	

IEC : International Electrotechnical Commission
EN : Europaischen Normen
EMC : Electromagnetic Compatibility
UL : Underwriters Laboratories
CSA : Canadian Standards Association

<Precautions in using options>
Use options correctly after reading operation manuals of the options to better understand the precautions. Take care not to apply excessive stress to each optional part.

Composition of Peripheral Equipments

Installation Environment

Use the servo driver in the environment of Pollution Degree 1 or 2 prescribed in IEC-60664-1 (e.g. Install the driver in control panel with IP54 protection structure.)

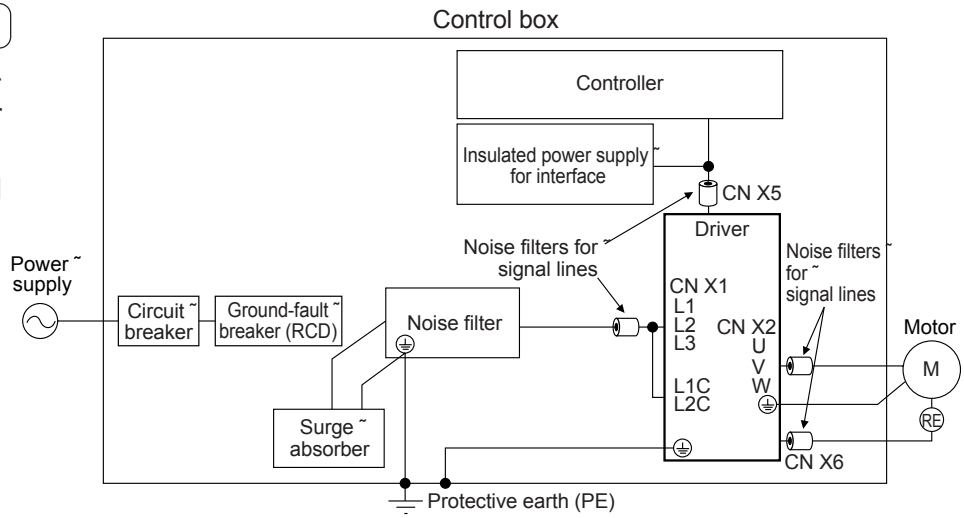

Power Supply

100V type : Single phase, (A, B and C-frame)	100V	+10% –15%	to	115V	+10% –15%	50/60Hz
200V type : Single phase, (B, C-frame)	200V	+10% –15%	to	240V	+10% –15%	50/60Hz
200V type : Single/3-phase, (C, D-frame)	200V	+10% –15%	to	240V	+10% –15%	50/60Hz
200V type : 3-phase, (E, F-frame)	200V	+10% –15%	to	230V	+10% –15%	50/60Hz

(1) This product is designed to be used at over-voltage category (Installation category) II of EN 50178:1997. If you want to use this product un over-voltage category (Installation category) III, install a surge absorber which complies with EN61634-11:2002 or other relevant standards at the power input portion.
(2) Use an insulated power supply of DC12 to 24V which has CE marking or complies with EN60950

Circuit Breaker

Install a circuit breaker which complies with IEC Standards and UL recognizes (Listed and ⓤⓛ marked) between power supply and noise filter.

Noise Filter

When you install one noise filter at the power supply for multi-axes application, contact to a manufacture of the noise filter.

Option part No.	Voltage specifications for driver	Manufacturer' s part No.	Applicable driver (frame)	Manufacturer
DV0P4170	Single phase 100V/200V	SUP-EK5-ER-6	A and B-frame	Okaya Electric Ind.

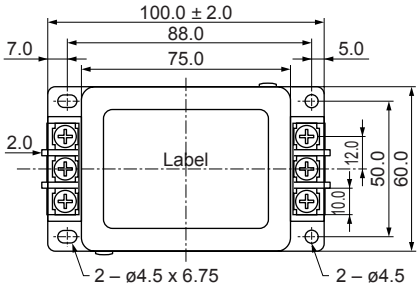

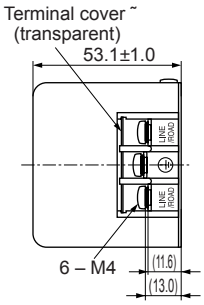

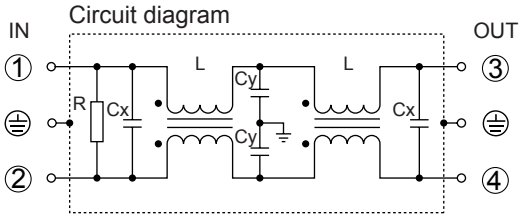

Option part No.	Voltage specifications for driver	Manufacturer' s part No.	Applicable driver (frame)	Manufacturer
DV0P4180˜	3-phase 200V	3SUP-HQ10-ER-6˜	C-frame˜	Okaya Electric Ind.
DV0P4220		3SUP-HU30-ER-6	D and E-frame	

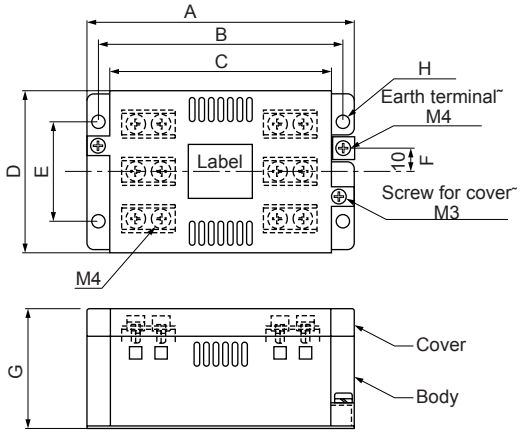

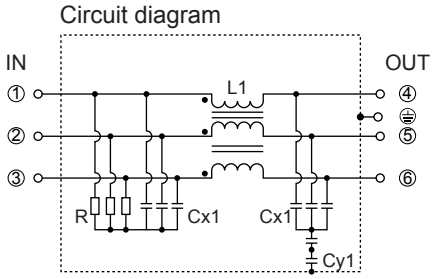

	A	B	C	D	E	F	G	H	K	L
DV0P4180	115	105	95	70	43	10	52	5.5	M4	M4
DV0P4220	145	135	125	70	50	10	52	5.5	M4	M4

Conformity to EC Directives and UL Standards

Option part No.	Voltage specifications for driver	Manufacturer' s part No.	Applicable driver (frame)	Manufacturer
DV0P3410	3-phase 200V	3SUP-HL50-ER-6B	F-frame	Okaya Electric Ind.

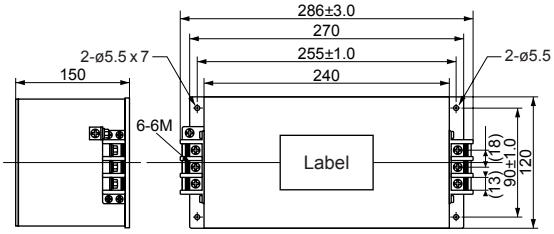

Circuit diagram

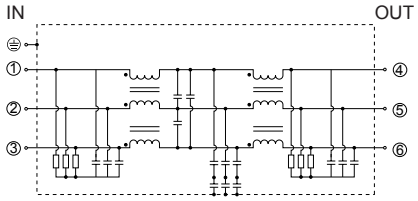

Surge Absorber

Provide a surge absorber for the primary side of noise filter.

Option part No.	Voltage specifications for driver	Manufacturer' s part No.	Manufacturer
DV0P1450	3-phase 200V	R . A .V-781BXZ-4	Okaya Electric Ind.

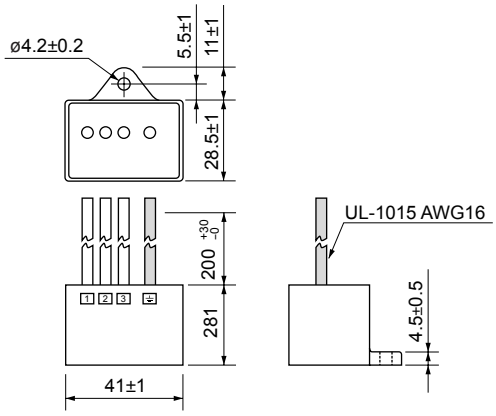

Circuit diagram

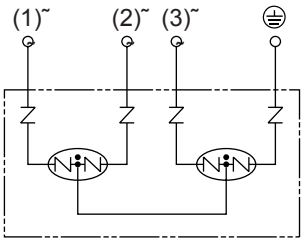

Option part No.	Voltage specifications for driver	Manufacturer' s part No.	Manufacturer
DV0P4190	Single phase 100/200V	R . A .V-781BWZ-4	Okaya Electric Ind.

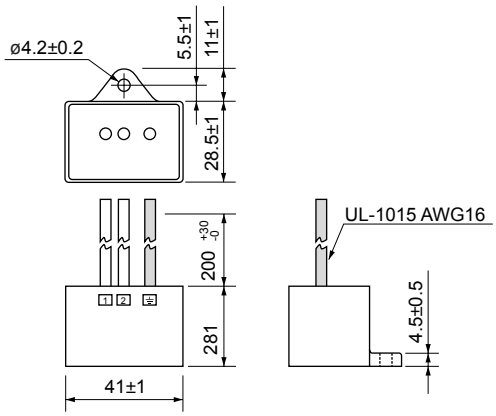

Circuit diagram

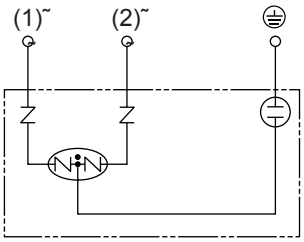

<Remarks>

Take off the surge absorber when you execute a dielectric test to the machine or equipment, or it may damage the surge absorber.

Noise Filter for Signal Lines *

Install noise filters for signal lines to all cables (power cable, motor cable, encoder cable and interface cable)
* In case of D-frame, install 3 noise filters at power line.

Option part No.	Manufacturer' s part No.	Manufacturer
DV0P1460	ZCAT3035-1330	TDK Corp.

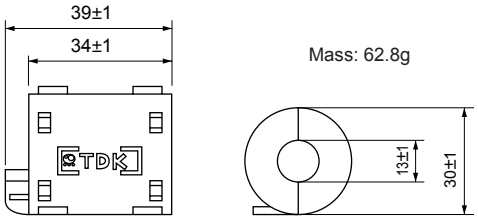

<Caution>
Fix the signal line noise filter in place to eliminate excessive stress to the cables.

Grounding

(1) Connect the protective earth terminal (⏚) of the driver and the protective earth terminal (PE) of the control box without fail to prevent electrical shocks.
(2) Do not make a joint connection to the protective earth terminals (⏚). 2 terminals are provided for protective earth.

Ground-Fault Breaker

Install a type B ground fault breaker (RCD) at primary side of the power supply.

<Note>
For driver and applicable peripheral equipments, refer to P.32 "Driver and List of Applicable Peripheral Equipments" of Preparation.

Driver and List of Applicable Peripheral Equipments (EC Directives)

Refer to P.32 "Driver and List of Applicable Peripheral Equipments" of Preparation.

Conformity to UL Standards

Observe the following conditions of (1) and (2) to make the system conform to UL508C (File No. E164620).
(1) Use the driver in an environment of Pollution Degree 2 or 1 prescribed in IEC60664-1. (e.g. Install in the control box with IP54 enclosure.)
(2) Install a circuit breaker or fuse which are UL recognized (LISTED Ⓤ marked) between the power supply and the noise filter without fail.
For the rated current of the circuit breaker or fuse, refer to P.32, "Driver and List of Applicable Peripheral Equipments" of Preparation.
Use a copper cable with temperature rating of 60°C or higher.
Tightening torque of more than the max. values (M4:1.2N·m, M5: 2.0N·m) may break the terminal block.
(3) Over-load protection level
Over-load protective function will be activated when the effective current exceeds 115% or more than the rated current based on the time characteristics. Confirm that the effective current of the driver does not exceed the rated current. Set up the peak permissible current with SV.Pr5E (1st torque limit) and SV.Pr5F (2nd torque limit).

Options

Specifications of for Motor Connector

• Pin disposition for encoder connector

MSMA˜
MDMA˜
MFMA˜
MHMA˜
MGMA

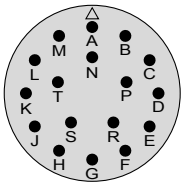

N/MS3102A20-29P
• Specifications of 2500P/r ˜ incremental encoder

Pin No.	Content	Pin No.	Content
A	NC	K	PS
B	NC	L	$\overline{PS}$
C	NC	M	NC
D	NC	N	NC
E	NC	P	NC
F	NC	R	NC
G	EOV	S	NC
H	E5V	T	NC
J	Frame GND ˜		

MSMA˜
MDMA˜
MFMA˜
MHMA˜
MGMA

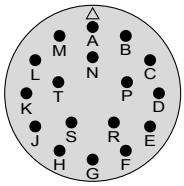

N/MS3102A20-29P
• Specifications of 17bit˜ absolute/incremental ˜ encoder

Pin No.	Content	Pin No.	Content
A	NC	K	PS
B	NC	L	$\overline{PS}$
C	NC	M	NC
D	NC	N	NC
E	NC	P	NC
F	NC	R	NC
G	EOV	S	BAT–*
H	E5V	T	BAT+*
J	Frame GND ˜		

*Connection to Pin-S and T are not ˜ required when used in incremental.

• Pin disposition for motor/brake connector (with brake)

MSMA˜ 1kW, 1.5kW, 2kW ˜
MDMA˜ 1kW, 1.5kW, 2kW˜
MFMA˜ 400W, 1.5kW˜
MHMA˜ 500W, 1kW, 1.5kW˜
MGMA˜ 900W

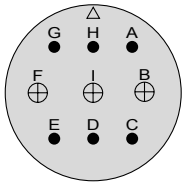

JL04V-2E20-18PE-B-R˜
(by Japan Aviation ˜ Electronics or equivalent)

Pin No.	Content
G	Brake
H	Brake
A	NC
F	U-phase
I	V-phase
B	W-phase
E	Earth
D	Earth
C	NC

MSMA˜ 3kW, 4kW, 5kW ˜
MDMA˜ 3kW, 4kW, 5kW˜
MFMA˜ 2.5kW, 4.5kW˜
MHMA˜ 2kW,3kW,4kW,5kW˜
MGMA˜ 2kW, 3kW, 4.5kW

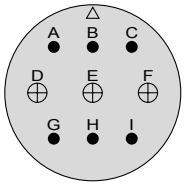

JL04V-2E24-11PE-B-R˜
(by Japan Aviation ˜ Electronics or equivalent)

Pin No.	Content
A	Brake
B	Brake
C	NC
D	U-phase
E	V-phase
F	W-phase
G	Earth
H	Earth
I	NC

• Pin disposition for motor/brake connector (without brake)

MSMA˜ 1kW, 1.5kW, 2kW ˜
MDMA˜ 1kW, 1.5kW, 2kW˜
MHMA˜ 500W, 1kW, 1.5kW˜
MGMA˜ 900W

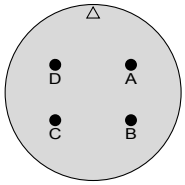

JL04V-2E20-4PE-B-R˜
(by Japan Aviation ˜ Electronics or equivalent)

PIN No.	Content
A	U-phase
B	V-phase
C	W-phase
D	Earth

MSMA˜ 3kW, 4kW, 5kW ˜
MDMA˜ 3kW, 4kW, 5kW ˜
MHMA˜ 2kW,3kW,4kW,5kW˜
MGMA˜ 2kW, 3kW, 4.5kW

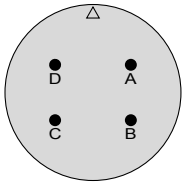

JL04V-2E22-22PE-B-R˜
(by Japan Aviation ˜ Electronics or equivalent)

PIN No.	Content
A	U-phase
B	V-phase
C	W-phase
D	Earth

MFMA˜ 400W, 1.5kW

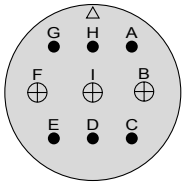

JL04V-2E20-18PE-B-R˜
(by Japan Aviation ˜ Electronics or equivalent)˜
˜

PIN No.	Content
G	NC
H	NC
A	NC
F	U-phase
I	V-phase
B	W-phase
E	Earth
D	Earth
C	NC

MFMA˜ 2.5kW, 4.5kW

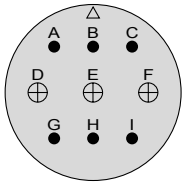

JL04V-2E24-11PE-B-R˜
(by Japan Aviation ˜ Electronics or equivalent)˜
˜

PIN No.	Content
A	NC
B	NC
C	NC
D	U-phase
E	V-phase
F	W-phase
G	Earth
H	Earth
I	NC

Do not connect anything to NC pins.

Table for junction cable by model of MINAS A4P series

Motor type	Type of junction cable			Part No of junction cable	Fig.No.
MAMA˜ 100W to 750W˜	Encoder˜	17bit, 7-wire˜	With battery holder for absolute encoder˜	MFECA0**0EAE˜	Fig.2-1˜
MSMD˜ 50W to 750W˜	˜˜		Without battery holder for absolute encoder˜	MFECA0**0EAD˜	Fig.2-2˜
MQMA˜ 100W to 400W˜	˜	2500P/r, 5-wire˜˜		MFECA0**0EAM˜	Fig.2-3˜
˜	Motor˜˜˜			MFMCA0**0EED˜	Fig.3-1˜
˜	Brake˜˜˜			MFMCB0**0GET˜	Fig.5-1˜
MSMA˜ 1.0kW, 1.5kW˜	Encoder˜	17bit, 7-wire˜	With battery holder for absolute encoder˜	MFECA0**0ESE˜	Fig.2-4˜
MDMA˜ 1.0kW, 1.5kW˜	˜˜		Without battery holder for absolute encoder˜	MFECA0**0ESD˜	Fig.2-5˜
MHMA˜ 0.5kW to 1.5kW˜	˜	2500P/r, 5-wire˜˜		MFECA0**0ESD˜	Fig.2-5˜
MGMA˜ 900W˜	Motor˜	without Brake˜˜		MFMCD0**2ECD˜	Fig.3-2˜
˜	˜	Brake˜˜		MFMCA0**2FCD˜	Fig.4-1˜
MSMA˜ 2.0kW˜	Encoder˜	17bit, 7-wire˜	With battery holder for absolute encoder˜	MFECA0**0ESE˜	Fig.2-4˜
MDMA˜ 2.0kW˜	˜˜		Without battery holder for absolute encoder˜	MFECA0**0ESD˜	Fig.2-5˜
˜	˜	2500P/r, 5-wire˜˜		MFECA0**0ESD˜	Fig.2-5˜
˜	Motor˜	without Brake˜˜		MFMCD0**2ECT˜	Fig.3-3
˜	˜	Brake˜˜		MFMCA0**2FCT˜	Fig.4-2˜
MSMA˜ 3.0kW to 5.0kW˜	Encoder˜	17bit, 7-wire˜	With battery holder for absolute encoder˜	MFECA0**0ESE˜	Fig.2-4˜
MDMA˜ 3.0kW to 5.0kW˜	˜˜		Without battery holder for absolute encoder˜	MFECA0**0ESD˜	Fig.2-5˜
MHMA˜ 2.0kW to 5.0kW˜	˜	2500P/r, 5-wire˜˜		MFECA0**0ESD˜	Fig.2-5˜
MGMA˜ 2.0kW to 4.5kW˜	Motor˜	without Brake˜˜		MFMCA0**3ECT˜	Fig.3-4˜
˜	˜	Brake˜˜		MFMCA0**3FCT˜	Fig.4-3˜
MFMA˜0.4kW, 1.5kW˜	Encoder˜	17bit, 7-wire˜	With battery holder for absolute encoder˜	MFECA0**0ESE˜	Fig.2-4˜
˜	˜˜		Without battery holder for absolute encoder˜	MFECA0**0ESD˜	Fig.2-5˜
˜	˜	2500P/r, 5-wire˜˜		MFECA0**0ESD˜	Fig.2-5˜
˜	Motor˜	without Brake˜˜		MFMCA0**2ECD˜	Fig.3-5˜
˜	˜	Brake˜˜		MFMCA0**2FCD˜	Fig.4-1˜
MFMA˜2.5kW, 4.5kW	Encoder˜	17bit, 7-wire˜	With battery holder for absolute encoder˜	MFECA0**0ESE˜	Fig.2-4˜
	˜˜		Without battery holder for absolute encoder˜	MFECA0**0ESD˜	Fig.2-5˜
	˜	2500P/r, 5-wire˜˜		MFECA0**0ESD˜	Fig.2-5˜
	Motor˜	without Brake˜˜		MFMCD0**3ECT˜	Fig.3-6˜
	˜	Brake˜˜		MFMCA0**3FCT	Fig.4-3

Options

Junction Cable for Encoder

MFECA00EAE**

MSMD 50W to 750W, MQMA 100W to 400W, MAMA 100W to 750W
17-bit absolute encoder with battery holder

Fig. 2-1

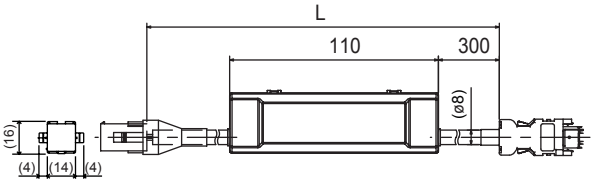

Title	Part No.	Manufacturer
Connector	551055100-0600 or 55100-0670 (lead-free)	Molex Inc.
Connector	172161-1	Tyco Electronics AMP
Connector pin	170365-1	
Cable	0.20mm^2 x 4P	Oki Electric Cable Co.

L(m)	Part No.
3	MFECA0030EAE
5	MFECA0050EAE
10	MFECA0100EAE
20	MFECA0200EAE

Note) Battery for absolute encoder is an option.

MFECA00EAD**

MSMD 50W to 750W, MQMA100W to 400W, MAMA 100W to 750W
17-bit incremental encoder without battery holder

Fig. 2-2

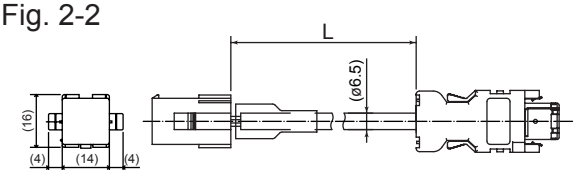

Title	Part No.	Manufacturer
Connector	55100-0600 or 55100-0670 (lead-free)	Molex Inc.
Connector	172161-1	Tyco Electronics AMP
Connector pin	170365-1	
Cable	0.20mm^2 x 3P	Oki Electric Cable Co.

L(m)	Part No.
3	MFECA0030EAD
5	MFECA0050EAD
10	MFECA0100EAD
20	MFECA0200EAD

MFECA00EAM**

MSMD 50W to 750W, MQMA 100W to 400W, MAMA 100W to 750W
2500P/r encoder

Fig. 2-3

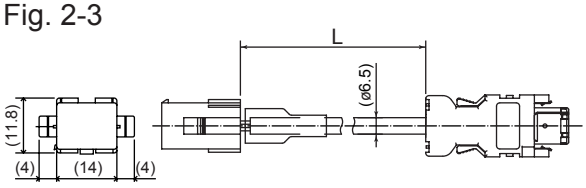

Title	Part No.	Manufacturer
Connector	55100-0600 or 55100-0670 (lead-free)	Molex Inc.
Connector	172160-1	Tyco Electronics AMP
Connector pin	170365-1	
Cable	0.20mm^2 x 3P	Oki Electric Cable Co.

L(m)	Part No.
3	MFECA0030EAM
5	MFECA0050EAM
10	MFECA0100EAM
20	MFECA0200EAM

MFECA00ESE**

MSMA, MDMA, MHMA, MGMA, MFMA
17-bit absolute encoder with battery holder

Fig. 2-4

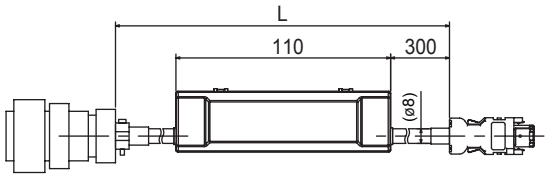

Title	Part No.	Manufacturer
Connector	55100-0600 or 55100-0670 (lead-free)	Molex Inc.
Straight plug	N/MS3106B20-29S	Japan Aviation Electronics Ind.
Cable clamp	N/MS3057-12A	
Cable	0.20mm^2 x 4P	Oki Electric Cable Co.

L(m)	Part No.
3	MFECA0030ESE
5	MFECA0050ESE
10	MFECA0100ESE
20	MFECA0200ESE

Note) Battery for absolute encoder is an option.

MFECA00ESD**

MSMA, MDMA, MHMA, MGMA, MFMA
17-bit incremental encoder without battery holder, 2500P/r encoder

Fig. 2-5

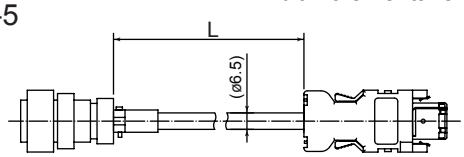

Title	Part No.	Manufacturer
Connector	55100-0600 or 55100-0670 (lead-free)	Molex Inc.
Straight plug	N/MS3106B20-29S	Japan Aviation Electronics Ind.
Cable clamp	N/MS3057-12A	
Cable	0.20mm^2 x 3P	Oki Electric Cable Co.

L(m)	Part No.
3	MFECA0030ESD
5	MFECA0050ESD
10	MFECA0100ESD
20	MFECA0200ESD

Junction Cable for Motor (ROBO-TOP® 105°C 600V·DP)

ROBO-TOP® is a trade mark of Daiden Co.,Ltd.

MFMCA0**0EED

MSMD 50W to 750W, MQMA 100W to 400W, MAMA 100W to 750W

Fig. 3-1

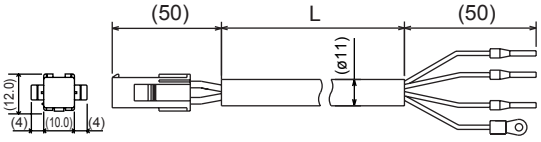

Title	Part No.	Manufacturer
Connector	172159-1	Tyco Electronics AMP
Connector pin	170366-1	
Rod terminal	AI0.75-8GY	Phoenix
Nylon insulated round terminal	N1.25-M4	J.S.T Mfg. Co., Ltd.
Cable	ROBO-TOP 600V 0.75mm²	Daiden Co.,Ltd.

L(m)	Part No.
3	MFMCA0030EED
5	MFMCA0050EED
10	MFMCA0100EED
20	MFMCA0200EED

MFMCD0**2ECD

MSMA 1.0kW to 1.5kW, MDMA 1.0kW to 1.5kW
MHMA 500W to 1.5kW, MGMA 900W

Fig. 3-2

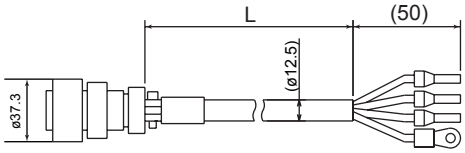

Title	Part No.	Manufacturer
Straight plug	JL04V-6A20-4SE-EB-R	Japan Aviation Electronics Ind.
Cable clamp	JL04-2022CK(14)-R	
Rod terminal	AI2.5-8BU	Phoenix
Nylon insulated round terminal	N2-M4	J.S.T Mfg. Co., Ltd.
Cable	ROBO-TOP 600V 2.0mm²	Daiden Co.,Ltd.

L(m)	Part No.
3	MFMCD0032ECD
5	MFMCD0052ECD
10	MFMCD0102ECD
20	MFMCD0202ECD

MFMCD0**2ECT

MSMA 2.0kW, MDMA 2.0kW

Fig. 3-3

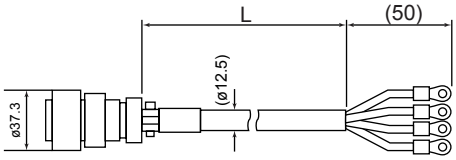

Title	Part No.	Manufacturer
Straight plug	JL04V-6A20-4SE-EB-R	Japan Aviation Electronics Ind.
Cable clamp	JL04-2022CK(14)-R	
Nylon insulated round terminal	N2-5	J.S.T Mfg. Co., Ltd.
Cable	ROBO-TOP 600V 2.0mm²	Daiden Co.,Ltd.

L(m)	Part No.
3	MFMCD0032ECT
5	MFMCD0052ECT
10	MFMCD0102ECT
20	MFMCD0202ECT

MFECA0**3ECT

MSMA 3.0kW to 5.0kW, MDMA 3.0kW to 5.0kW
MHMA 2.0kW to 5.0kW, MGMA 2.0kW to 4.5kW

Fig. 3-4

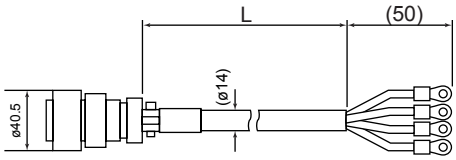

Title	Part No.	Manufacturer
Straight plug	JL04V-6A22-22SE-EB-R	Japan Aviation Electronics Ind.
Cable clamp	JL04-2022CK(14)-R	
Nylon insulated round terminal	N5.5-5	J.S.T Mfg. Co., Ltd.
Cable	ROBO-TOP 600V 3.5mm²	Daiden Co.,Ltd.

L(m)	Part No.
3	MFMCA0033ECT
5	MFMCA0053ECT
10	MFMCA0103ECT
20	MFMCA0203ECT

MFMCA0**2ECD

MFMA 400W to 1.5kW

Fig. 3-5

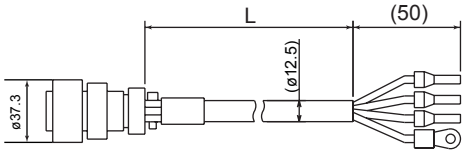

Title	Part No.	Manufacturer
Straight plug	JL04V-6A20-18SE-EB-R	Japan Aviation Electronics Ind.
Cable clamp	JL04-2022CK(14)-R	
Rod terminal	AI2.5-8BU	Phoenix
Nylon insulated round terminal	N2-M4	J.S.T Mfg. Co., Ltd.
Cable	ROBO-TOP 600V 2.0mm²	Daiden Co.,Ltd.

L(m)	Part No.
3	MFMCA0032ECD
5	MFMCA0052ECD
10	MFMCA0102ECD
20	MFMCA0202ECD

MFMCD0**3ECT

MFMA 2.5kW to 4.5kW

Fig. 3-6

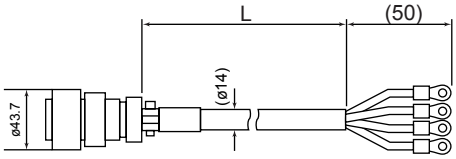

Title	Part No.	Manufacturer
Straight plug	JL04V-6A24-11SE-EB-R	Japan Aviation Electronics Ind.
Cable clamp	JL04-2428CK(17)-R	
Nylon insulated round terminal	N5.5-5	J.S.T Mfg. Co., Ltd.
Cable	ROBO-TOP 600V 3.5mm²	Daiden Co.,Ltd.

L(m)	Part No.
3	MFMCD0033ECT
5	MFMCD0053ECT
10	MFMCD0103ECT
20	MFMCD0203ECT

CTi Automation - Phone: 800.894.0412 - Fax: 208.368.0415 - Web: www.ctiautomation.net - Email: info@ctiautomation.net

Options

Junction Cable for Motor with Brake (ROBO-TOP® 105°C 600V·DP)

ROBO-TOP® is a trade mark of Daiden Co.,Ltd.

MFMCA02FCD**

Fig. 4-1

MSMA 1.0kW to 1.5kW, MDMA 1.0kW to 1.5kW
MHMA 500W to 1.5kW, MFMA 400W to 1.5kW
MGMA 900W

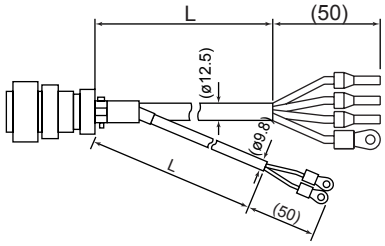

Title		Part No.	Manufacturer
Straight plug		JL04V-6A20-18SE-EB-R	Japan Aviation Electronics Ind.
Cable clamp		JL04-2022CK(14)-R	
Rod terminal		AI2.5-8BU	Phoenix
Nylon insulated round terminal	Earth	N2-M4	J.S.T Mfg. Co., Ltd.
	Brake	N1.25-M4	
Cable		ROBO-TOP 600V 0.75mm² and ROBO-TOP 600V 2.0mm²	Daiden Co.,Ltd.

L(m)	Part No.
3	MFMCA0032FCD
5	MFMCA0052FCD
10	MFMCA0102FCD
20	MFMCA0202FCD

MFMCA02FCT**

Fig. 4-2

MSMA 2.0kW, MDMA 2.0kW

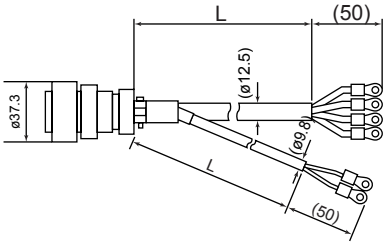

Title		Part No.	Manufacturer
Straight plug		JL04V-6A20-18SE-EB-R	Japan Aviation Electronics Ind.
Cable clamp		JL04-2022CK(14)-R	
Nylon insulated round terminal	Earth	N2-5	J.S.T Mfg. Co., Ltd.
	Brake	N1.25-M4	
Cable		ROBO-TOP 600V 0.75mm² and ROBO-TOP 600V 2.0mm²	Daiden Co.,Ltd.

L(m)	Part No.
3	MFMCA0032FCT
5	MFMCA0052FCT
10	MFMCA0102FCT
20	MFMCA0202FCT

MFMCA03FCT**

Fig. 4-3

MSMA 3.0kW to 5.0kW, MDMA 3.0kW to 5.0kW
MHMA 2.0kW to 5.0kW, MFMA 2.5kW to 4.5kW
MGMA 2.0kW to 4.5kW

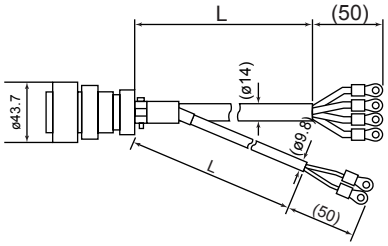

Title		Part No.	Manufacturer
Straight plug		JL04V-6A24-11SE-EB-R	Japan Aviation Electronics Ind.
Cable clamp		JL04-2428CK(17)-R	
Nylon insulated round terminal	Earth	N5.5-5	J.S.T Mfg. Co., Ltd.
	Brake	N1.25-M4	
Cable		ROBO-TOP 600V 0.75mm² and ROBO-TOP 600V 3.5mm²	Daiden Co.,Ltd.

L(m)	Part No.
3	MFMCA0033FCT
5	MFMCA0053FCT
10	MFMCA0103FCT
20	MFMCA0203FCT

Junction Cable for Brake (ROBO-TOP® 105°C 600V·DP)

ROBO-TOP® is a trade mark of Daiden Co.,Ltd.

MFMCB00GET**

Fig. 5-1

MSMD 50W to 750W
MQMA 100W to 400W
MAMA 100W to 750W

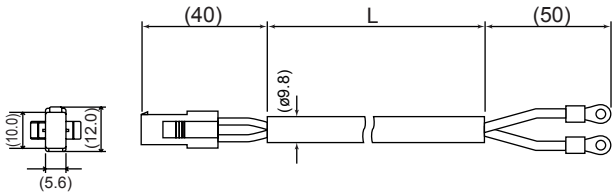

Title	Part No.	Manufacturer
Connector	172157-1	Tyco Electronics AMP
Connector pin	170366-1,170362-1	
Nylon insulated round terminal	N1.25-M4	J.S.T Mfg. Co., Ltd.
Cable	ROBO-TOP 600V 0.75mm²	Daiden Co.,Ltd.

L(m)	Part No.
3	MFMCB0030GET
5	MFMCB0050GET
10	MFMCB0100GET
20	MFMCB0200GET

Connector Kit for External Peripheral Equipments

1) Par No. **DV0P4350**

2) Components

Title	Part No.	Quantity	Manufacturer	Note
Connector	54306-3611 or 54306-3619 (lead-free)	1	Molex Inc.	For CN X5 (36-pins)
Connector cover	54331-0361	1		

3) Pin disposition (36 pins) (viewed from the soldering side)

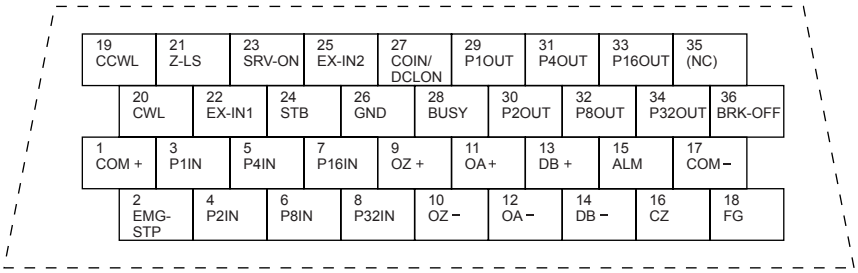

<Cautions>

1) Check the stamped pin-No. on the connector body while making a wiring.
2) For the function of each signal title or its symbol, refer to the wiring example of the connector CN I/F.
3) Check the stamped pin-No. on the connector body while making a wiring.

Interface Cable

1) Par No. **DV0P4510**

2) Dimensions

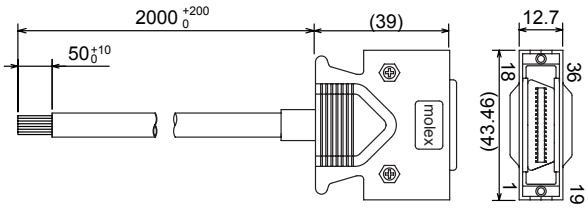

<Remarks>
Color designation of the cable
e.g.) Pin-1 Cable color : Orange
(Red1) : One red dot on the cable

3) Table for wiring

Cable of 2m is connected.

Pin No.	color	Pin No.	color	Pin No.	color
1	Orange (Red1)	13	Gray (Red2)	25	White (Red3)
2	Orange (Black1)	14	Gray (Black2)	26	White (Black3)
3	Gray (Red1)	15	White (Red2)	27	Yellow (Red3)
4	White (Red1)	16	White (Black2)	28	Yellow (Black3)
5	White (Black1)	17	Yellow (Red2)	29	Pink (Red3)
6	Gray (Black1)	18	Yellow (Black2)	30	Pink (Black3)
7	Yellow (Red1)	19	Pink (Red2)	31	Orange (Red4)
8	Yellow (Black1)	20	Pink (Black2)	32	Orange (Black4)
9	Pink (Red1)	21	Orange (Red3)	33	Gray (Red4)
10	Pink (Black1)	22	Orange (Black3)	34	Gray (Black4)
11	Orange (Red2)	23	Gray (Red3)	35	White (Red4)
12	Orange (Black2)	24	Gray (Black3)	36	White (Black4)

Communication Cable (for connection to PC)

1) Par No. **DV0P1960** **(DOS/V machine)**

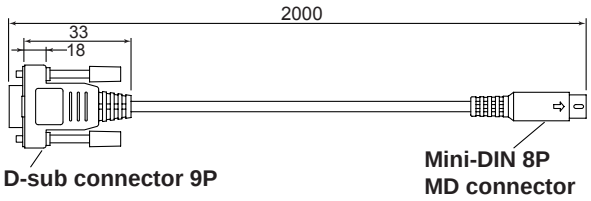

Setup Support Software "PANATERM®"

1) Part No. **DV0P4460** **(English/Japanese version)**
2) Supply media : CD-ROM

<Caution>
For setup circumstance, refer to the Instruction Manual of [PANATERM®].

Options

Connector Kit for Motor/Encoder Connection

These are required when you make your own encoder and motor cables.

•Applicable motor models : MSMD 50W to 750W
MQMA 100W to 400W
MAMA 100W to 750W

[**17-bit absolute**] For brake, purchase our optional brake cable.

1) Part No. **DV0P4290**

2) Components

Title	Part No.	Number	Manufacturer	Note
Connector	55100-0600 or 55100-0670 (lead-free)	**1**	Molex Inc.	For CN X6 (6-pins)
Connector	172161-1	**1**	Tyco Electronics AMP	For junction cable to encoder (9-pins)
Connector pin	170365-1	**9**		
Connector	172159-1	**1**	Tyco Electronics AMP	For junction cable to motor (4-pins)
Connector pin	170366-1	**4**		

3) Pin disposition of connector, CN X6

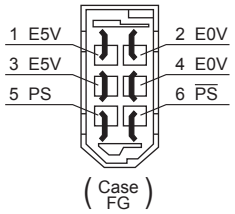

4) Pin disposition of junction cable for encoder

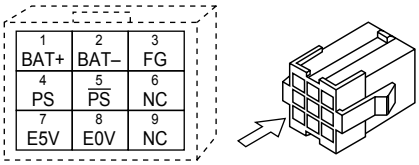

5) Pin disposition of junction cable for motor power

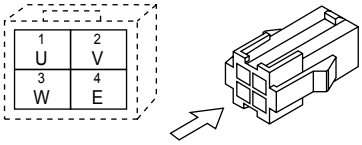

*When you connect the battery for absolute encoder, refer to P.138, "When you make your own cable for 17-bit absolute encoder"

•Applicable motor models : MSMD 50W to 750W
MQMA 100W to 400W
MAMA 100W to 750W

[**2500P/r incremental encoder**] For brake, purchase our optional brake cable.

1) Part No. **DV0P4380**

2) Components

Title	Part No.	Number	Manufacturer	Note
Connector	55100-0600 or 55100-0670 (lead-free)	1	Molex Inc.	For CN X6 (6-pins)
Connector	172160-1	1	Tyco Electronics AMP	For junction cable to encoder (6-pins)
Connector pin	170365-1	6		
Connector	172159-1	1	Tyco Electronics AMP	For junction cable to encoder (4-pins)
Connector pin	170366-1	4		

3) Pin disposition of connector, CN X6

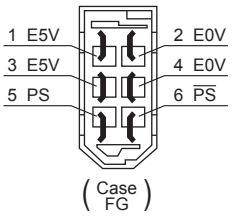

4) Pin disposition of junction cablefor encoder

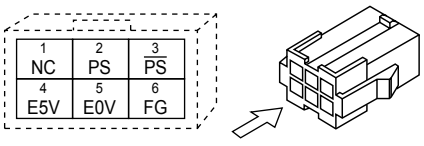

5) Pin disposition of junction cable for motor power

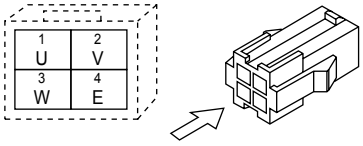

For DVOP2490, DV0P3480,
• recommended manual crimp tool
(to be prepared by customer)

Title	Part No.	Manufacturer
For junction cable to encoder	755330 - 1	Tyco Electronics AMP
For junction cable to motor	755331 - 1	

•**Applicable motor models : MSMA 1.0kW to 2.0kW**
MDMA 1.0kW to 2.0kW
MHMA 500W to 1.5kW
MGMA 900W

[**17-bit absolute incremental encoder, 2500P/r incremental encoder**] Without brake

1) Part No. **DV0P4310**

2) Components

Title	Part No.	Number	Manufacturer	Note
Connector	55100-0600 or 55100-0670 (lead-free)	1	Molex Inc.	For CN X6 (6-pins)
Straight plug	N/MS3106B20-29S	1	Japan Aviation Electronics Industry Ltd.	For junction cable to encoder
Cable clamp	N/MS3057-12A	1		
Straight plug	N/MS3106B20-4S	1	Japan Aviation Electronics Industry Ltd.	For junction cable to motor power
Cable clamp	N/MS3057-12A	1		

•**Applicable motor models : MSMA 3.0kW to 5.0kW**
MDMA 3.0kW to 5.0kW
MHMA 2.0kW to 5.0kW
MGMA 2.0kW to 4.5kW

[**17-bit absolute incremental encoder, 2500P/r incremental encoder**] Without brake

1) Part No. **DV0P4320**

2) Components

Title	Part No.	Number	Manufacturer	Note
Connector	55100-0600 or 55100-0670 (lead-free)	1	Molex Inc.	For CN X6 (6-pins)
Straight plug	N/MS3106B-20-29S	1	Japan Aviation Electronics Industry Ltd.	For junction cable to encoder
Cable clamp	N/MS3057-12A	1		
Straight plug	N/MS3106B22-22S	1	Japan Aviation Electronics Industry Ltd.	For junction cable to motor power
Cable clamp	N/MS3057-12A	1		

•**Applicable motor models : MSMA 1.0kW to 2.0kW**
MDMA 1.0kW to 2.0kW
MHMA 0.5kW to 1.5kW
MGMA 900W

[**17-bit absolute incremental encoder, 2500P/r incremental encoder**] With brake

MFMA 0.4kW to 1.5kW [**17-bit absolute incremental encoder, 2500P/r incremental encoder**] Without brake / With brake

1) Part No. **DV0P4330**

2) Components

Title	Part No.	Number	Manufacturer	Note
Connector	55100-0600 or 55100-0670 (lead-free)	1	Molex Inc.	For CN X6 (6-pins)
Straight plug	N/MS3106B20-29S	1	Japan Aviation Electronics Industry Ltd.	For junction cable to encoder
Cable clamp	N/MS3057-12A	1		
Straight plug	N/MS3106B20-18S	1	Japan Aviation Electronics Industry Ltd.	For junction cable to motor power
Cable clamp	N/MS3057-12A	1		

•**Applicable motor models : MSMA 3.0kW to 5.0kW**
MDMA 3.0kW to 5.0kW
MHMA 2.0kW to 5.0kW
MGMA 2.0kW to 4.5kW

[**17-bit absolute incremental encoder, 2500P/r incremental encoder**] With brake

MFMA 2.5kW to 4.5kW [**17-bit absolute incremental encoder, 2500P/r incremental encoder**] Without brake / With brake

1) Part No. **DV0P4340**

2) Components

Title	Part No.	Number	Manufacturer	Note
Connector	55100-0600 or 55100-0670 (lead-free)	1	Molex Inc.	For CN X6 (6-pins)
Straight plug	N/MS3106B20-29S	1	Japan Aviation Electronics Industry Ltd.	For junction cable to encoder
Cable clamp	N/MS3057-12A	1		
Straight plug	N/MS3106B24-11S	1	Japan Aviation Electronics Industry Ltd.	For junction cable to motor power
Cable clamp	N/MS3057-16A	1		

Options

Mounting Bracket

Frame symbol of applicable driver	part No.	Mounting screw	Dimensions	
			Upper side	Bottom side
A-frame	**DV0P 4271**	M4 x L6 Pan head 4pcs	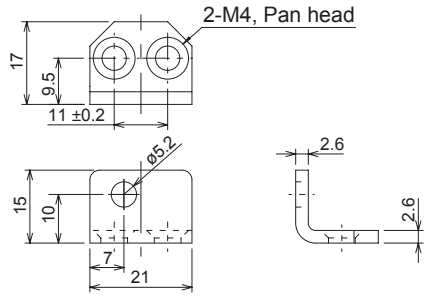	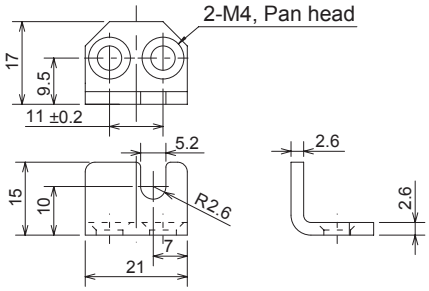
B-frame	**DV0P 4272**	M4 x L6 Pan head 4pcs	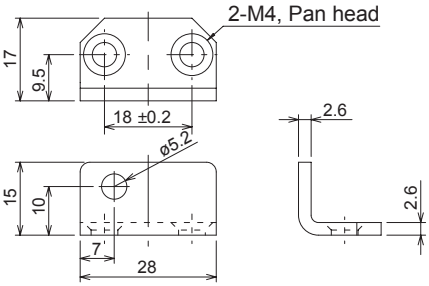	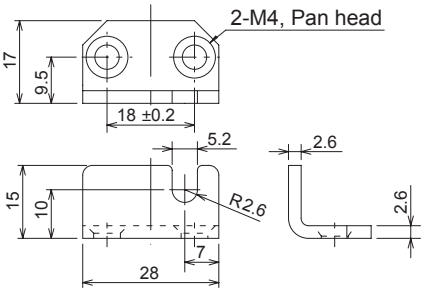
C-frame	**DV0P 4273**	M4 x L6 Pan head 4pcs	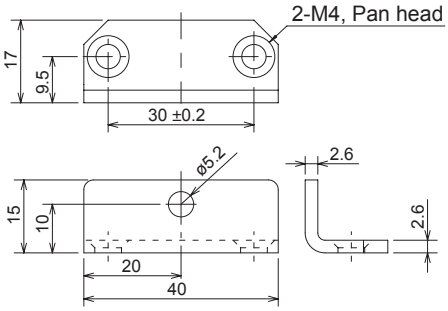	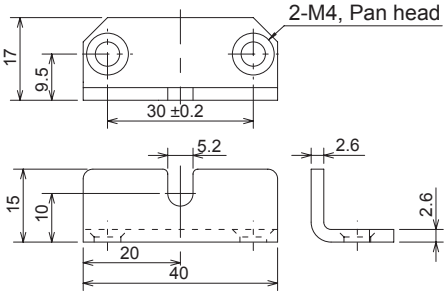
D-frame	**DV0P 4274**	M4 x L6 Pan head 4pcs	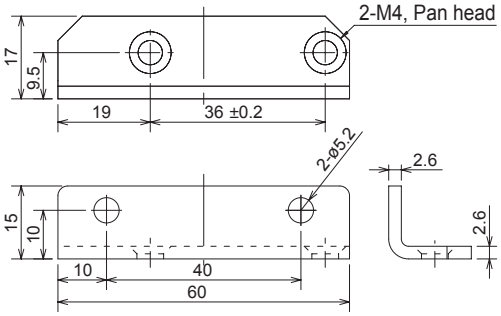	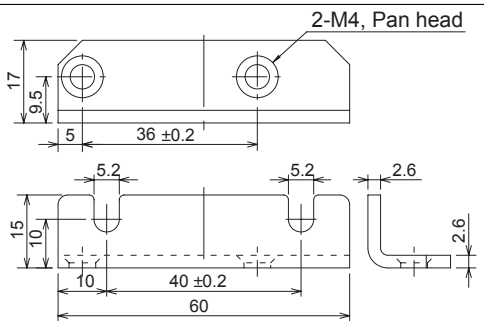

<Caution>

For E and F-frame, you con make a front end and back end mounting by changing the mounting direction of L-shape bracket (attachment).

Console

Part No. **DV0P4420**

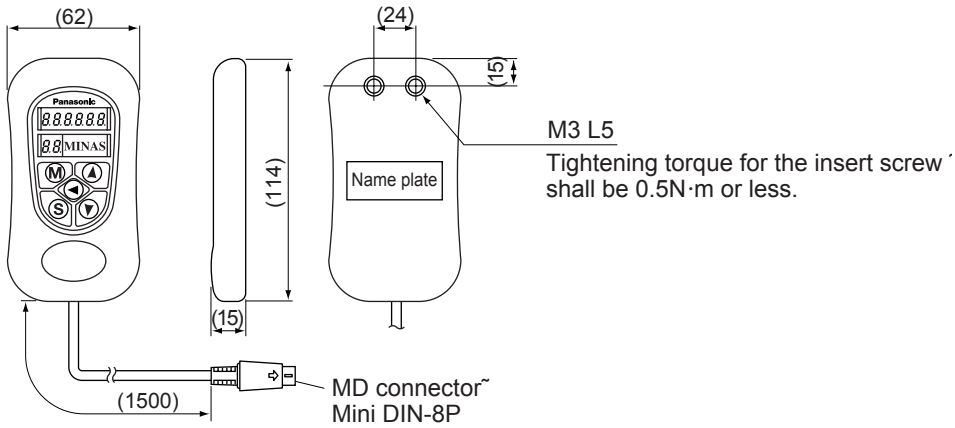

Reactor

Fig.1

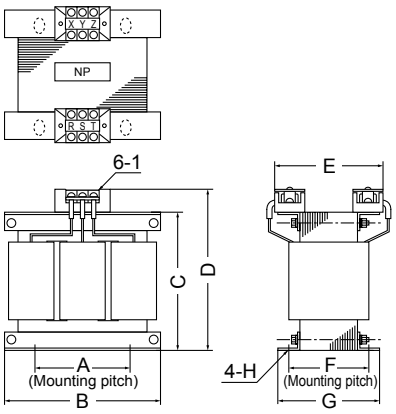

Fig.2

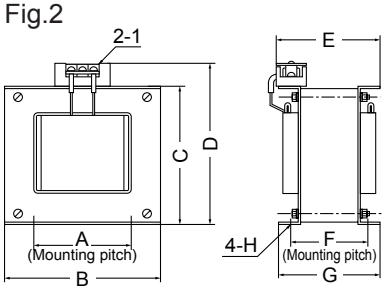

	Part No.	A	B	C	D	E	F	G	H	I	Inductance (mH)	Rated current (A)
Fig.1	**DV0P220**	65	125	83	118	145	70	85	7(w) x 12(L)	M4	6.81	3
	DV0P221	60	150	113	137	120	60	75	7(w) x 12(L)	M4	4.02	5
	DV0P222	60	150	113	137	130	70	95	7(w) x 12(L)	M4	2	8
	DV0P223	60	150	113	137	140	79	95	7(w) x 12(L)	M4	1.39	11
	DV0P224	60	150	113	137	145	84	100	7(w) x 12(L)	M4	0.848	16
	DV0P225	60	150	113	137	160	100	115	7(w) x 12(L)	M5	0.557	25
Fig.2	**DV0P226**	55	80	68	90	90	41	55	ø7.0	M4	6.81	3
	DV0P227	55	80	68	90	90	41	55	ø7.0	M4	4.02	5
	DV0P228	55	80	68	90	95	46	60	ø7.0	M4	2	8
	DV0P229	55	80	68	90	105	56	70	ø7.0	M4	1.39	11

Motor series	Power supply	Rated output	Part No.
MSMD	Single phase, 100V	50W to 100W	DV0P227
MQMA		100W	
MSMD		200W to 400W	DV0P228
MQMA			
MSMD	Single phase, 200V	50W to 200W	DV0P220
MQMA		100W to 200W	
MAMA			
MFMA		400W	
MHMA		500W	
MSMD		400W to 750W	DV0P221
MQMA		400W	
MAMA		400W to 750W	
MAMA	3-phase, 200V	400W	DV0P220
MFMA			
MHMA		500W	
MSMD		750W	DV0P221
MAMA			

Motor series	Power supply	Rated output	Part No.
MGMA	3-phase, 200V	900W	DV0P222
MSMA		1.0kW 1.5kW	
MDMA			
MHMA			
MFMA		1.5kW	
MSMA		2.0kW	DV0P223
MDMA			
MHMA			
MGMA			
MFMA		2.5kW	DV0P224
MSMA		3.0kW	
MDMA			
MHMA			
MGMA			
MSMA		4.0kW	DV0P225
MDMA			
MHMA			

Harmonic restraint

On September, 1994, “Guidelines for harmonic restraint on heavy consumers who receive power through high voltage system or extra high voltage system” and “Guidelines for harmonic restraint on household electrical appliances and general-purpose articles” established by the Agency for Natural Resources and Energy of the Ministry of Economy, Trade and Industry (the ex-Ministry of International Trade and Industry). According to those guidelines, the Japan Electrical Manufacturers’ Association (JEMA) have prepared technical documents (procedure to execute harmonic restraint: JEM-TR 198, JEM-TR 199 and JEM-TR 201) and have been requesting the users to understand the restraint and to cooperate with us. On January, 2004, it has been decided to exclude the general-purpose inverter and servo driver from the “Guidelines for harmonic restraint on household electrical appliances and general-purpose articles”. After that, the “Guidelines for harmonic restraint on household electrical appliances and general-purpose articles” was abolished on September 6, 2004.

We are pleased to inform you that the procedure to execute the harmonic restraint on general-purpose inverter and servo driver was modified as follows.

1. All types of the general-purpose inverters and servo drivers used by specific users are under the control of the “Guidelines for harmonic restraint on heavy consumers who receive power through high voltage system or extra high voltage system”. The users who are required to apply the guidelines must calculate the equivalent capacity and harmonic current according to the guidelines and must take appropriate countermeasures if the harmonic current exceeds a limit value specified in a contract demand. (Refer to JEM-TR 210 and JEM-TR 225.)
2. The “Guidelines for harmonic restraint on household electrical appliances and general-purpose articles” was abolished on September 6, 2004. However, based on conventional guidelines, JEMA applies the technical documents JEM-TR 226 and JEM-TR 227 to any users who do not fit into the “Guidelines for harmonic restraint on heavy consumers who receive power through high voltage system or extra high voltage system” from a perspective on enlightenment on general harmonic restraint. The purpose of these guidelines is the execution of harmonic restraint at every device by a user as usual to the utmost extent.

Options

External Regenerative Resistor

Part No.	Manufacturer's part No.	Specifications					Activation temperature of built-in thermostat
		Resistance	Rated power (reference) *				
			Free air	with fan [W]			
		Ω	[W]	1m/s	2m/s	3m/s	
DV0P4280	RF70M	50	10	25	35	45	140±5˚C B-contact Open/Close capacity (resistance load) 4A 125VAC 10000 times 2.5A 250VAC 10000 times
DV0P4281	RF70M	100	10	25	35	45	
DV0P4282	RF18B	25	17	50	60	75	
DV0P4283	RF18B	50	17	50	60	75	
DV0P4284	RF240	30	40	100	120	150	
DV0P4285	RH450F	20	52	130	160	200	

Manufacturer : Iwaki Musen Kenkyusho

* Power with which the driver can be used without activating the built-in thermostat.

DV0P4280, DV0P4281

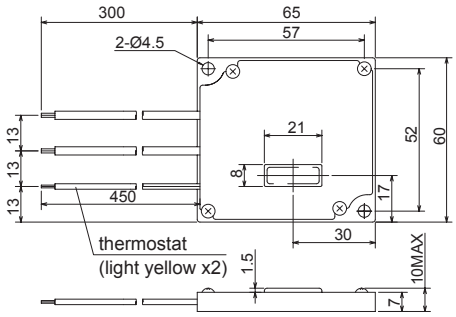

DV0P4282,DV0P4283

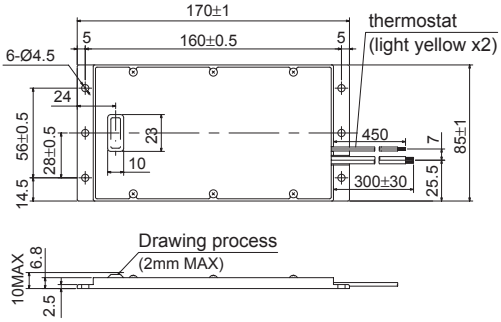

Frame	Power supply	
	Single phase, 100V	Single phase, 200V 3-phase, 200V
A	DV0P4280	DV0P4281
B	DV0P4283	DV0P4283
C	DV0P4282	
D	–	DV0P4284
E		DV0P4285
F		Arrange 2 DV0P4285 in a parallel

DV0P4284

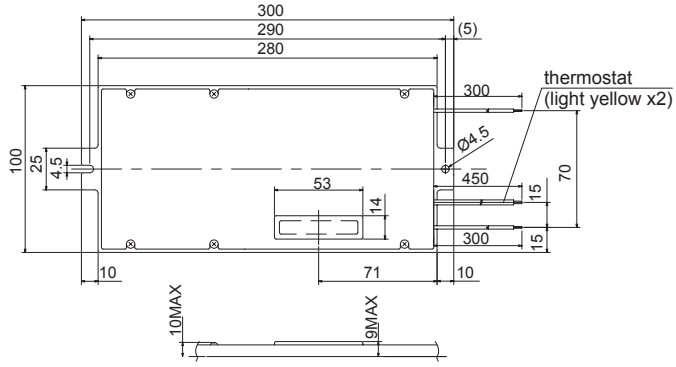

DV0P4285

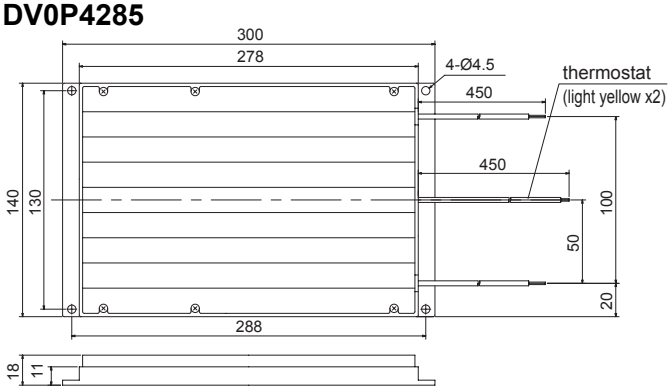

<Remarks>

Thermal fuse is installed for safety. Compose the circuit so that the power will be turned off when the thermostat is activated. The thermal fuse may blow due to heat dissipating condition, working temperature, supply voltage or load fluctuation.

Make it sure that the surface temperature of the resistor may not exceed 100˚C at the worst running conditions with the machine, which brings large regeneration (such case as high supply voltage, load inertia is large or deceleration time is short) Install a fan for a forced cooling if necessary.

<Caution>

Regenerative resistor gets very hot.

Take preventive measures for fire and burns.
Avoid the installation near inflammable objects, and easily accessible place by hand.

Battery For Absolute Encoder

Battery

(1) Part No. **DV0P2990**

(2) Lithium battery by Toshiba Battery Co.
ER6V, 3.6V 2000mAh

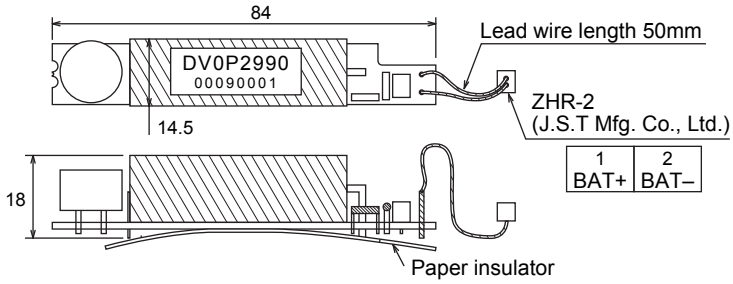

<Caution>

This battery is categorized as hazardous substance, and you may be required to present an application of hazardous substance when you transport by air (both passenger and cargo airlines).

Surge Absorber for Motor Brake

Motor	Surge absorber for motor brake
MSMD 50W to 1.0kW	• C-5A2 or Z15D151 Ishizuka Electronics Co.
MAMA 100W to 750W	
MHMA 2.0kW to 5.0kW	
MGMA 900W to 2.0kW	
MSMA 1.5kW to 5.0kW	• C-5A3 or Z15D151 Ishizuka Electronics Co.
MDMA 4.0kW to 5.0kW	
MFMA 1.5kW	
MGMA 3.0kW to 4.5kW	
MDMA 1.0kW to 3.0kW	• TNR9V820K Nippon Chemi_Con Co.
MFMA 400W	
MFMA 2.5kW to 4.5kW	
MHMA 500W to 1.5kW	

List of Peripheral Equipments (reference only)

Manufacturer	Tel No./URL	Peripheral components
Automation Controls Company Matsushita Electric Works, Ltd.		Non-fuse breaker Magnetic contactor Surge absorber
Iwaki Musen Kenkyusho Co., Ltd.		Regenerative resistor
Nippon Chemi_Con Corp.		Surge absorber for holding brake
Ishizuka Electronics Corp.		
Renesas Technology Corp.		
TDK Corp.		Noise filter for signal lines
Okaya Electric Industries Co. Ltd.		Surge absorber Noise filter
Japan Aviation Electronics Industry, Ltd.		Connector
Sumitomo 3M		
Tyco Electronics AMP k.k,		
Japan Molex Inc.		
Hirose Electric Co., Ltd.		
J.S.T Mfg. Co., Ltd.		
Daiden Co., Ltd.		Cable
Mitutoyo Corp.		External scale

* The above list is for reference only. We may change the manufacturer without notice.

CTi Automation - Phone: 800.894.0412 - Fax: 208.368.0415 - Web: www.ctiautomation.net - Email: info@ctiautomation.net

Dimensions (Driver)

A-frame

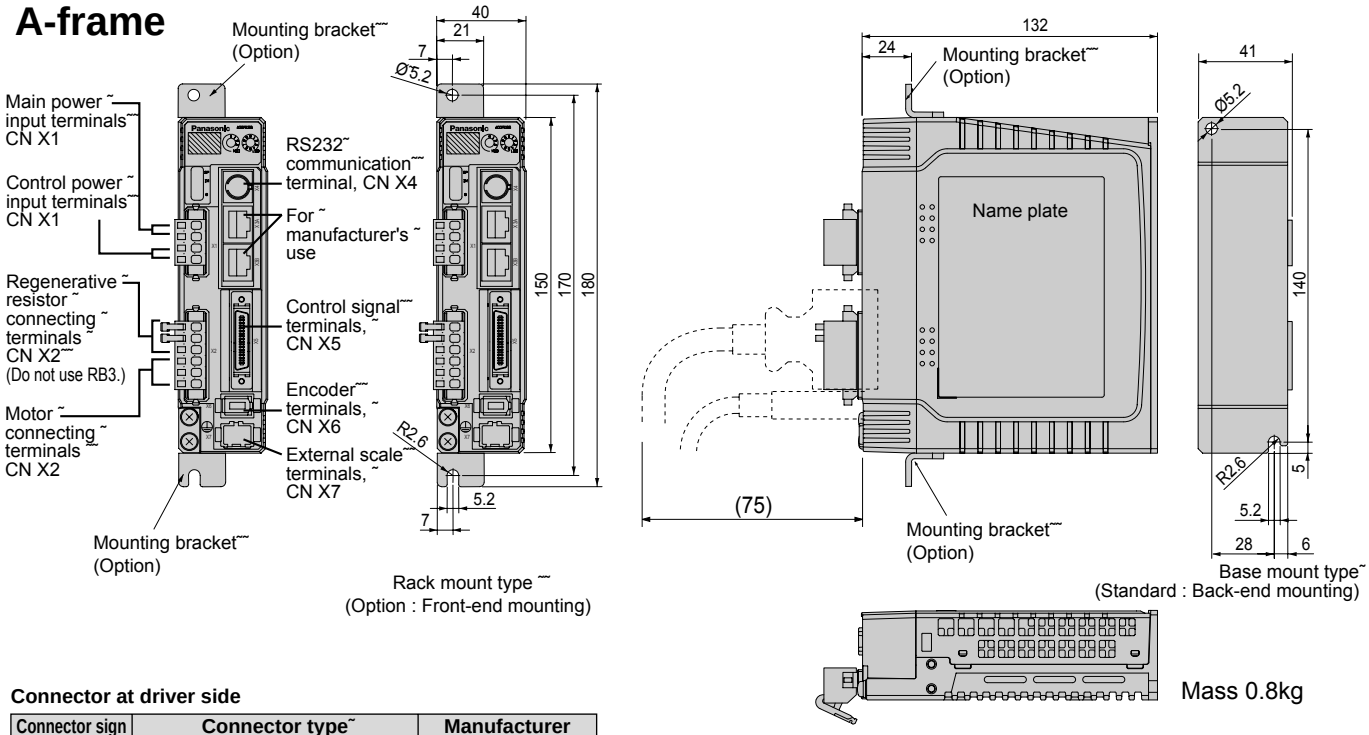

Mass 0.8kg

Connector at driver side

Connector sign	Connector type	Manufacturer
CNX7	53460-0629 (or equivalent)	Molex Inc.
CNX6	53460-0629 (or equivalent)	Molex Inc.
CNX5	529863679 (or equivalent)	Molex Inc.
CNX4	MD-S8000-10 (or equivalent)	J.S.T. Mfg.Co., Ltd.
CNX3B	855050013 (or equivalent)	Molex Inc.
CNX3A	855050013 (or equivalent)	Molex Inc.
CNX2	S06B-F32SK-GGXR (or equivalent)	J.S.T. Mfg.Co., Ltd.
CNX1	S04B-F32SK-GGXR (or equivalent)	J.S.T. Mfg.Co., Ltd.

Connector at Power Supply and motor side (which comes with the driver)

Connector sign	Connector type	Manufacturer
CNX2	06JFAT-SAXGF (or equivalent)	J.S.T. Mfg.Co., Ltd.
CNX1	04JFAT-SAXGF (or equivalent)	J.S.T. Mfg.Co., Ltd.

* Refer to P.188, "Mounting bracket for driver"of Options, when you use the optional mounting bracket.

B-frame

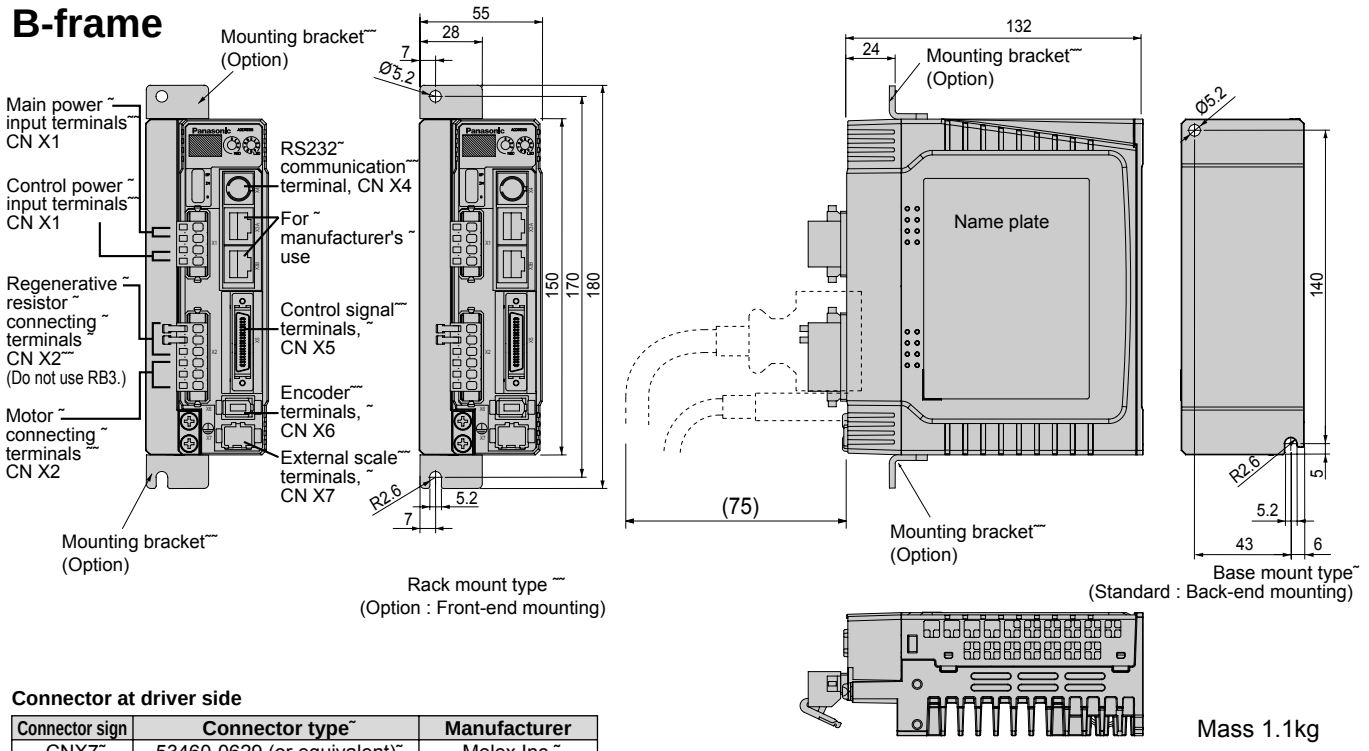

Mass 1.1kg

Connector at driver side

Connector sign	Connector type	Manufacturer
CNX7	53460-0629 (or equivalent)	Molex Inc.
CNX6	53460-0629 (or equivalent)	Molex Inc.
CNX5	529863679 (or equivalent)	Molex Inc.
CNX4	MD-S8000-10 (or equivalent)	J.S.T. Mfg.Co., Ltd.
CNX3B	855050013 (or equivalent)	Molex Inc.
CNX3A	855050013 (or equivalent)	Molex Inc.
CNX2	S06B-F32SK-GGXR (or equivalent)	J.S.T. Mfg.Co., Ltd.
CNX1	S04B-F32SK-GGXR (or equivalent)	J.S.T. Mfg.Co., Ltd.

Connector at Power Supply and motor side (which comes with the driver)

Connector sign	Connector type	Manufacturer
CNX2	06JFAT-SAXGF (or equivalent)	J.S.T. Mfg.Co., Ltd.
CNX1	04JFAT-SAXGF (or equivalent)	J.S.T. Mfg.Co., Ltd.

* Refer to P.188, "Mounting bracket for driver"of Options, when you use the optional mounting bracket.

C-frame

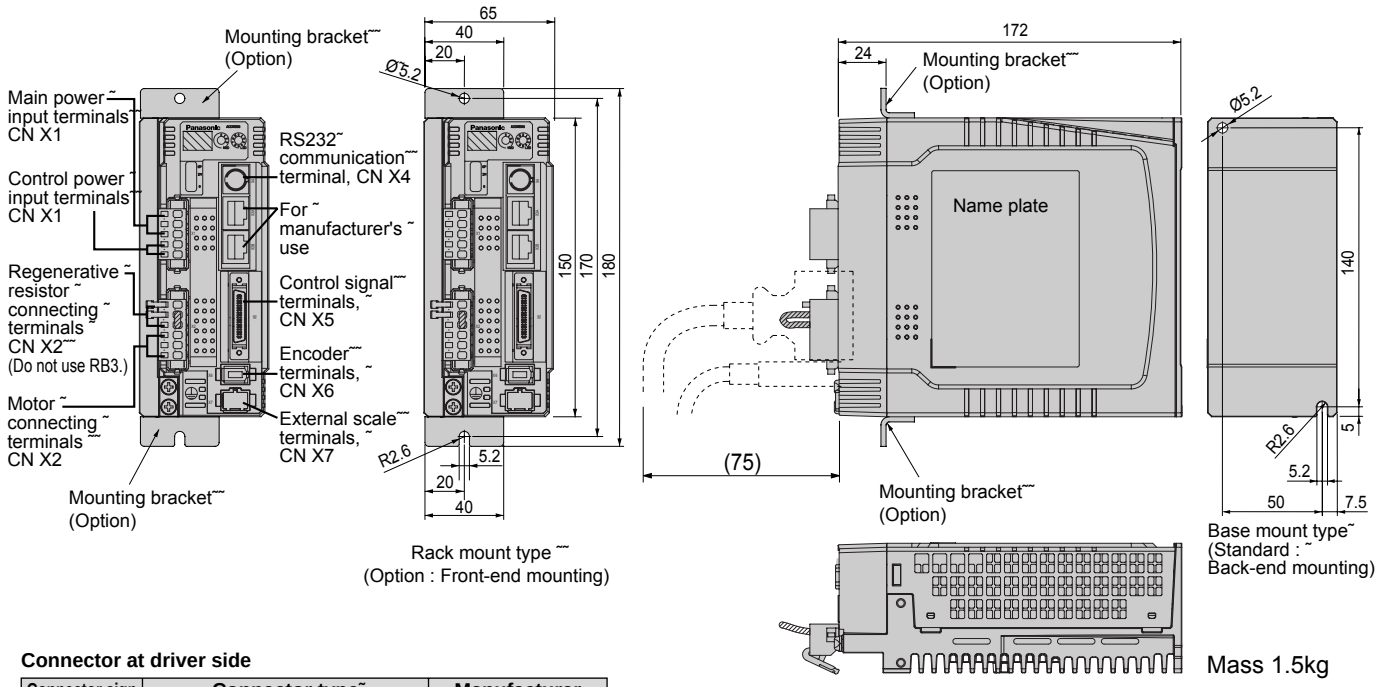

Mass 1.5kg

Connector at driver side

Connector sign	Connector type	Manufacturer
CNX7	53460-0629 (or equivalent)	Molex Inc.
CNX6	53460-0629 (or equivalent)	Molex Inc.
CNX5	529863679 (or equivalent)	Molex Inc.
CNX4	MD-S8000-10 (or equivalent)	J.S.T. Mfg.Co., Ltd.
CNX3B	855050013 (or equivalent)	Molex Inc.
CNX3A	855050013 (or equivalent)	Molex Inc.
CNX2	S06B-F32SK-GGXR (or equivalent)	J.S.T. Mfg.Co., Ltd.
CNX1	S05B-F32SK-GGXR (or equivalent)	J.S.T. Mfg.Co., Ltd.

Connector at Power Supply and motor side (which comes with the driver)

Connector sign	Connector type	Manufacturer
CNX2	06JFAT-SAXGF (or equivalent)	J.S.T. Mfg.Co., Ltd.
CNX1	05JFAT-SAXGF (or equivalent)	J.S.T. Mfg.Co., Ltd.

* Refer to P.188, "Mounting bracket for driver"of Options, when you use the optional mounting bracket.

D-frame

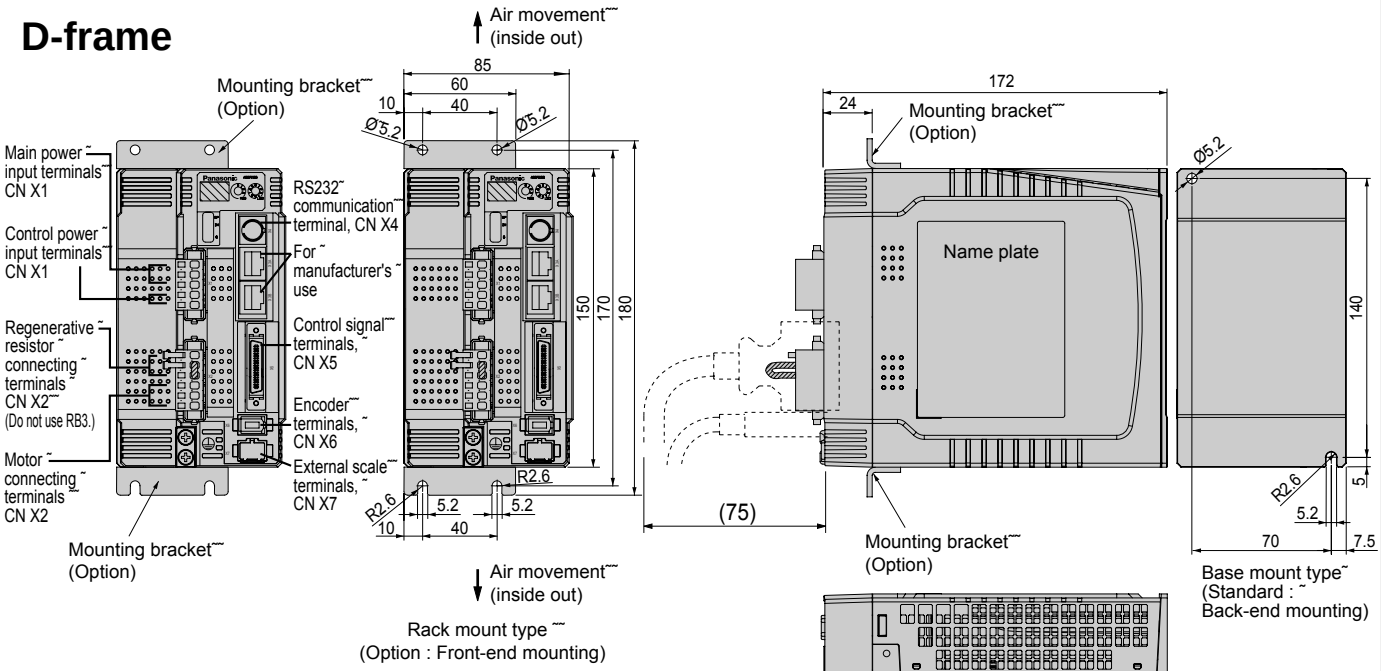

Mass 1.7kg

Connector at driver side

Connector sign	Connector type	Manufacturer
CNX7	53460-0629 (or equivalent)	Molex Inc.
CNX6	53460-0629 (or equivalent)	Molex Inc.
CNX5	529863679 (or equivalent)	Molex Inc.
CNX4	MD-S8000-10 (or equivalent)	J.S.T. Mfg.Co., Ltd.
CNX3B	855050013 (or equivalent)	Molex Inc.
CNX3A	855050013 (or equivalent)	Molex Inc.
CNX2	S06B-F32SK-GGXR (or equivalent)	J.S.T. Mfg.Co., Ltd.
CNX1	S05B-F32SK-GGXR (or equivalent)	J.S.T. Mfg.Co., Ltd.

Connector at Power Supply and motor side (which comes with the driver)

Connector sign	Connector type	Manufacturer
CNX2	06JFAT-SAXGF (or equivalent)	J.S.T. Mfg.Co., Ltd.
CNX1	05JFAT-SAXGF (or equivalent)	J.S.T. Mfg.Co., Ltd.

* Refer to P.188, "Mounting bracket for driver"of Options, when you use the optional mounting bracket.

Dimensions (Driver)

E-frame

Connector at driver side

Connector sign	Connector type	Manufacturer
CNX7	53460-0629 (or equivalent)	Molex Inc.
CNX6	53460-0629 (or equivalent)	Molex Inc.
CNX5	529863679 (or equivalent)	Molex Inc.
CNX4	MD-S8000-10 (or equivalent)	J.S.T. Mfg.Co., Ltd.
CNX3B	855050013 (or equivalent)	Molex Inc.
CNX3A	855050013 (or equivalent)	Molex Inc.

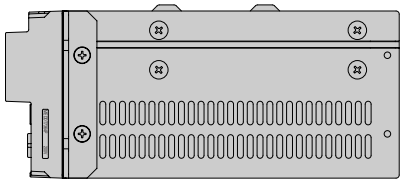

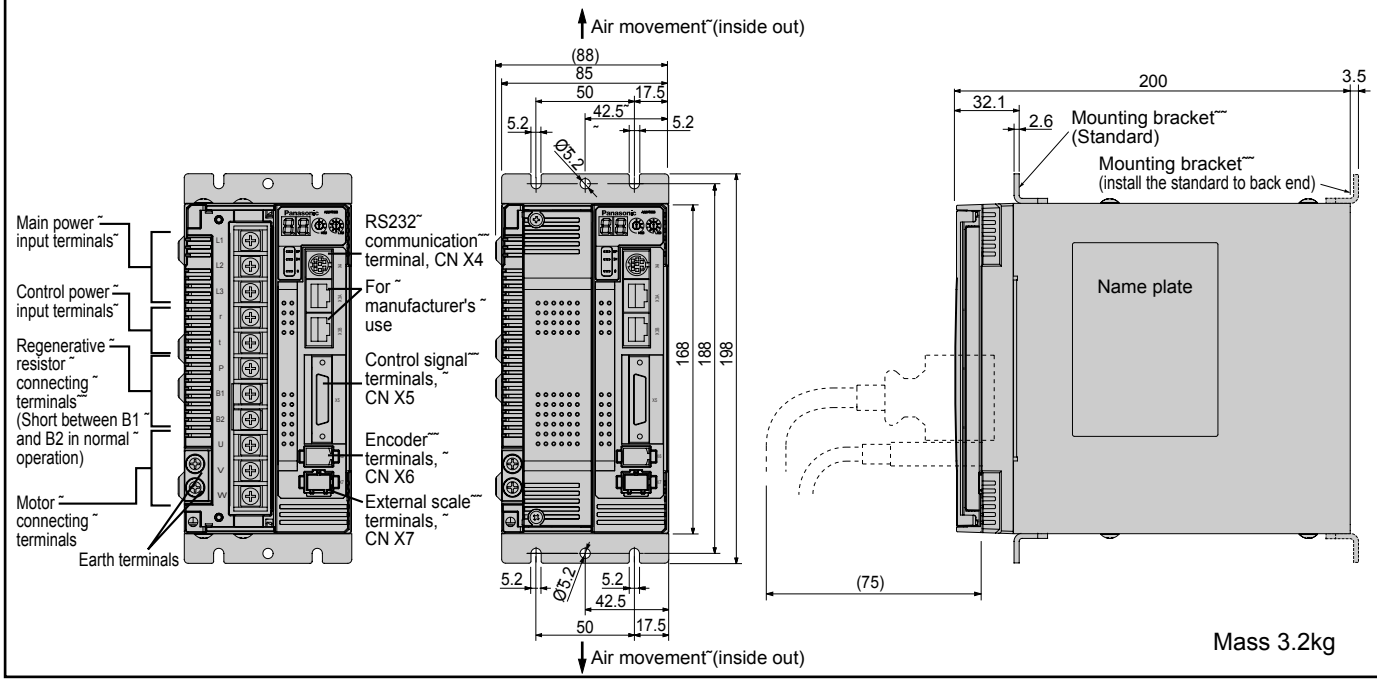

Mass 3.2kg

F-frame

Connector at driver side

Connector sign	Connector type	Manufacturer
CNX7	53460-0629 (or equivalent)	Molex Inc.
CNX6	53460-0629 (or equivalent)	Molex Inc.
CNX5	529863679 (or equivalent)	Molex Inc.
CNX4	MD-S8000-10 (or equivalent)	J.S.T. Mfg.Co., Ltd.
CNX3B	855050013 (or equivalent)	Molex Inc.
CNX3A	855050013 (or equivalent)	Molex Inc.

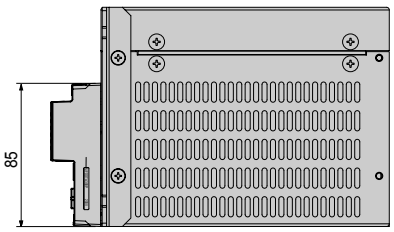

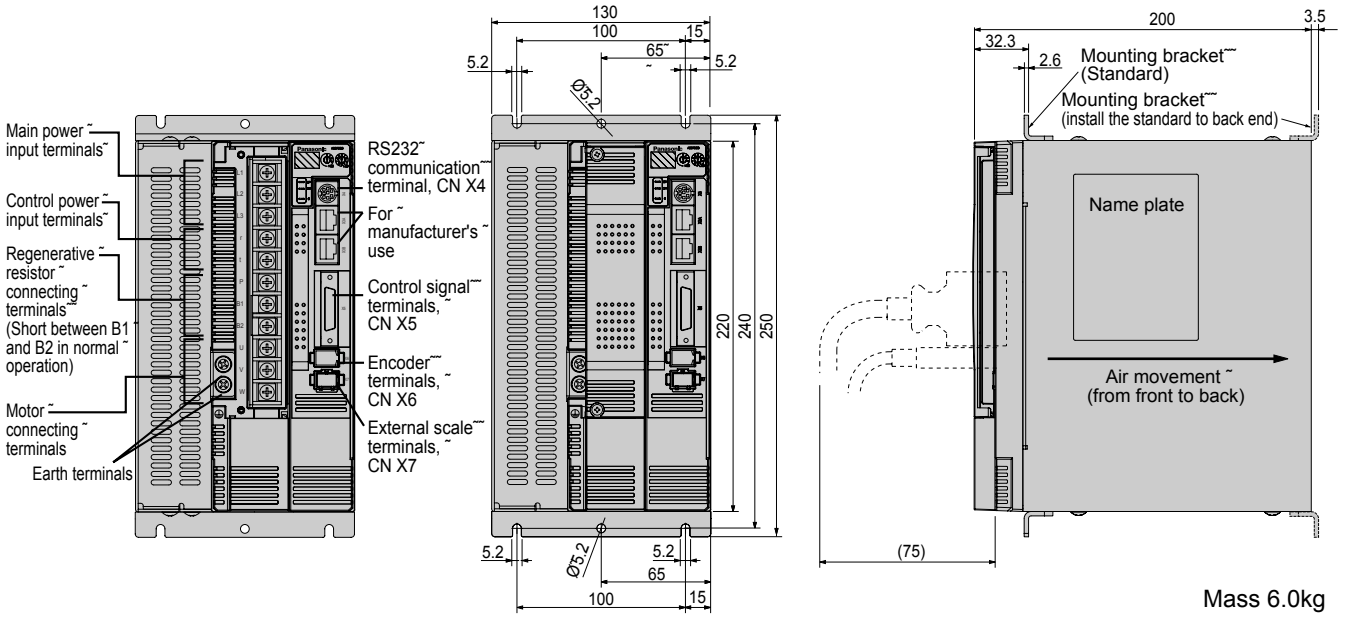

Mass 6.0kg

• MAMA 100W to 750W

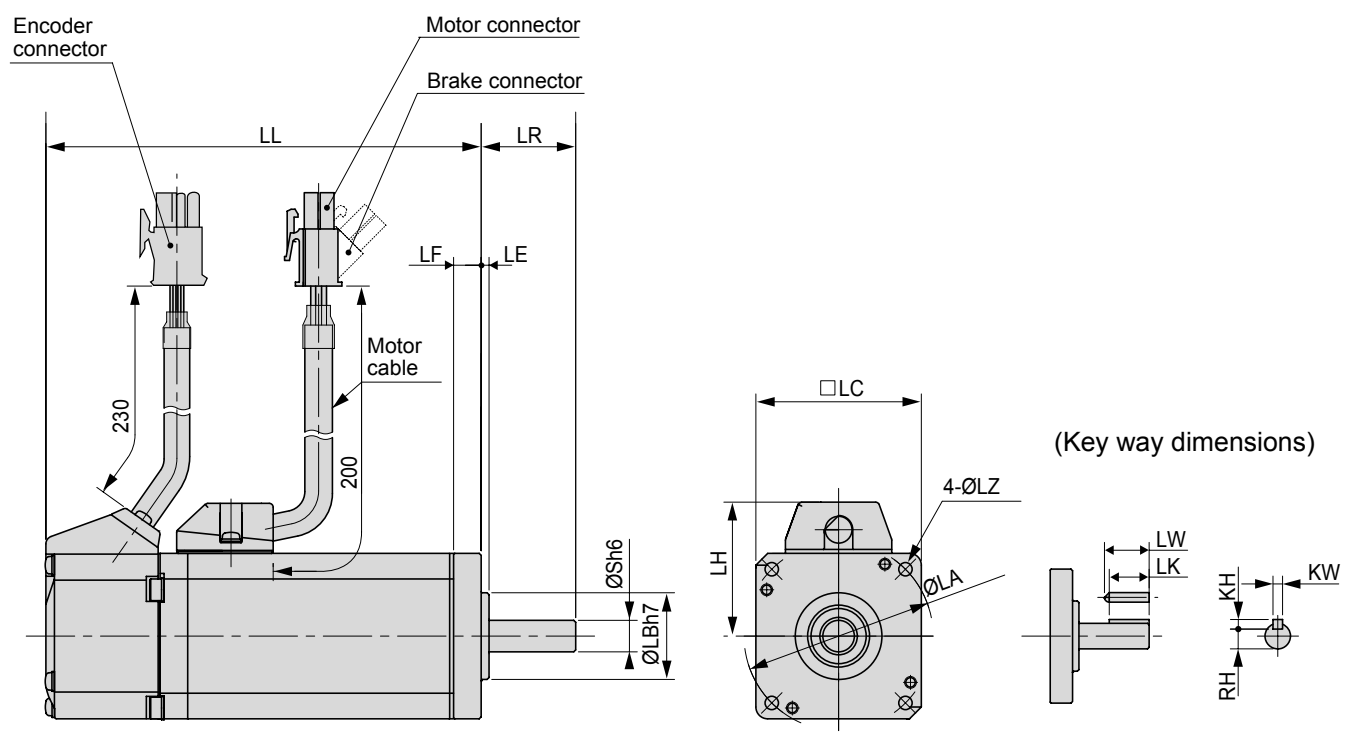

* Dimensions are subject to change without notice. Contact us or a dealer for the latest information.

		MAMA series (Ultra low inertia)							
Motor output		100W		200W		400W		750W	
Motor model	MAMA	012P1 *	012S1 *	022P1 *	022S1 *	042P1 *	042S1 *	082P1 *	082S1 *
Rotary encoder specifications		2500P/r Incremental	17-bit Absolute/ Incremental	2500P/r Incremental	17-bit Absolute/ Incremental	2500P/r Incremental	17-bit Absolute/ Incremental	2500P/r Incremental	17-bit Absolute/ Incremental
LL	Without brake	110.5	127	111	126	139	154	160	175
	With brake	138	154.5	139	154	167	182	192.5	207.5
LR		24		30		30		35	
S		8		11		14		19	
LA		48		70		70		90	
LB		22		50		50		70	
LC		42		60		60		80	
LD		—		—		—		—	
LE		2		3		3		3	
LF		7		7		7		8	
LG		—		—		—		—	
LH		34		43		43		53	
LZ		3.4		4.5		4.5		6	
Key way dimensions	LW	14		20		25		25	
	LK	12.5		18		22.5		22	
	KW	3h9		4h9		5h9		6h9	
	KH	3		4		5		6	
	RH	6.2		8.5		11		15.5	
Mass (kg)	Without brake	0.65	0.71	1.1	1.2	1.5	1.6	3.3	3.4
	With brake	0.85	0.91	1.5	1.6	1.9	2.0	4.0	4.1
Connector/Plug specifications		Refer to P.186, "Options".							

<Cautions>
Reduce the moment of inertia ratio if high speed response operation is required.

Dimensions (Motor)

• MSMD 50W to 100W

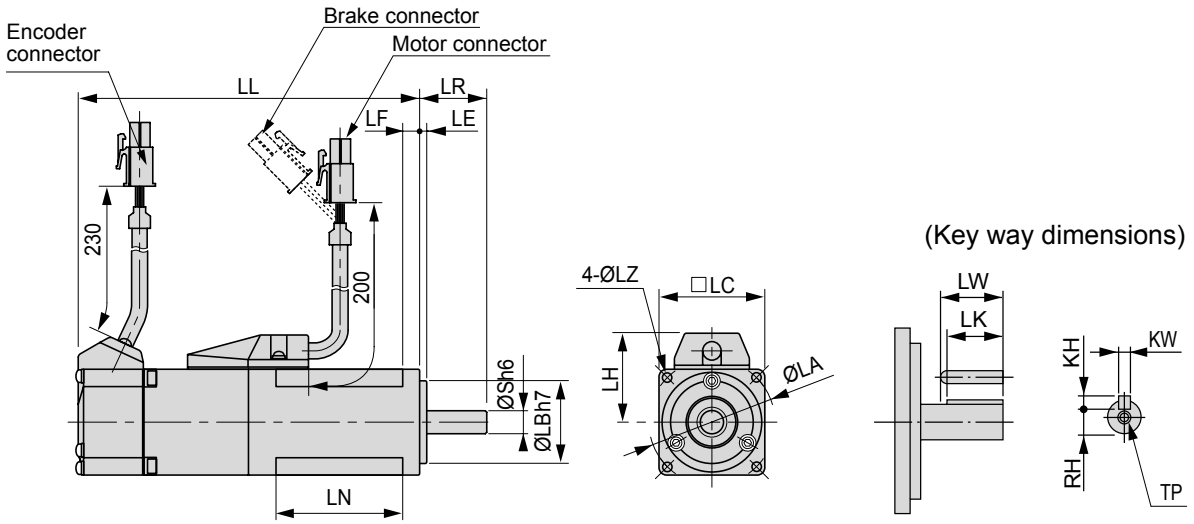

* Dimensions are subject to change without notice. Contact us or a dealer for the latest information.

		MSMD series (low inertia)			
Motor output		50W		100W	
Motor model	MSMD	5A * P1 *	5A * S1 *	01 * P1 *	01 * S1 *
Rotary encoder specifications		2500P/r Incremental	17-bit Absolute/ Incremental	2500P/r Incremental	17-bit Absolute/ Incremental
L L	Without brake	72		92	
	With brake	102		122	
L R		25		25	
S		8		8	
L A		45		45	
L B		30		30	
L C		38		38	
L D		—		—	
L E		3		3	
L F		6		6	
L G		—		—	
L H		32		32	
L N		26.5		46.5	
L Z		3.4		3.4	
Key way dimensions	L W	14		14	
	L K	12.5		12.5	
	K W	3h9		3h9	
	K H	3		3	
	R H	6.2		6.2	
	T P	M3 x 6 (depth)		M3 x 6 (depth)	
Mass (kg)	Without brake	0.32		0.47	
	With brake	0.53		0.68	
Connector/Plug specifications		Refer to P.186, "Options".			

<Cautions>

Reduce the moment of inertia ratio if high speed response operation is required.

• MSMD 200W to 750W

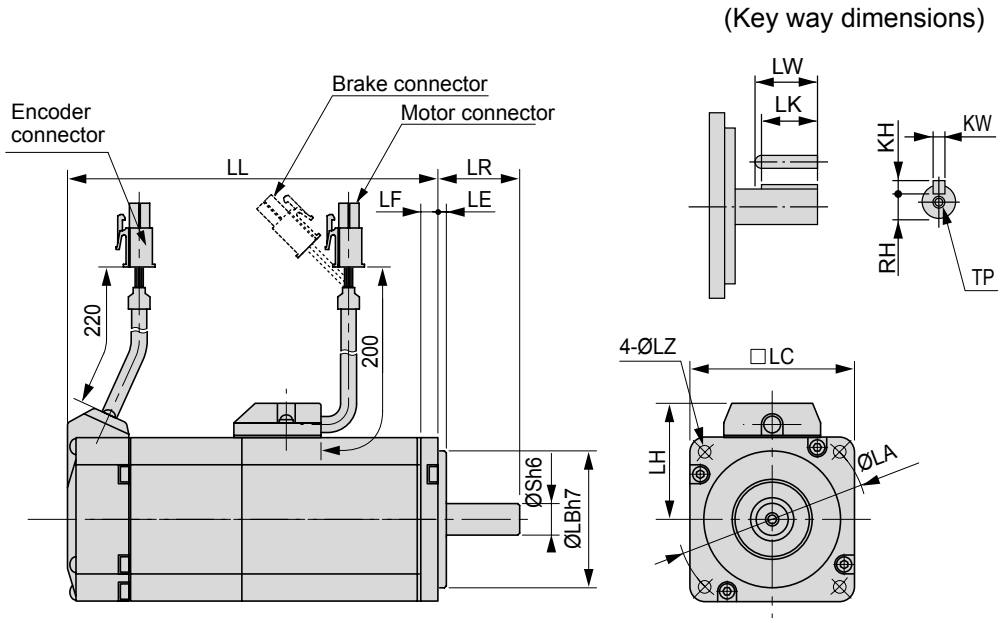

* Dimensions are subject to change without notice. Contact us or a dealer for the latest information.

		MSMD series (low inertia)					
Motor output		200W		400W		750W	
Motor model	MSMD	02 * P1 *	02 * S1 *	04 * P1 *	04 * S1 *	08 * P1 *	08 * S1 *
Rotary encoder specifications		2500P/r Incremental	17-bit Absolute/ Incremental	2500P/r Incremental	17-bit Absolute/ Incremental	2500P/r Incremental	17-bit Absolute/ Incremental
L L	Without brake	79		98.5		112	
	With brake	115.5		135		149	
L R		30		30		35	
S		11		14		19	
L A		70		70		90	
L B		50		50		70	
L C		60		60		80	
L D		—		—		—	
L E		3		3		3	
L F		6.5		6.5		8	
L G		—		—		—	
L H		43		43		53	
L N		—		—		—	
L Z		4.5		4.5		6	
Key way dimensions	L W	20		25		25	
	L K	18		22.5		22	
	K W	4h9		5h9		6h9	
	K H	4		5		6	
	R H	8.5		11		15.5	
	T P	M4 x8 (depth)		M5 x 10 (depth)		M5 x 10 (depth)	
Mass (kg)	Without brake	0.82		1.2		2.3	
	With brake	1.3		1.7		3.1	
Connector/Plug specifications		Refer to P.186, "Options".					

<Cautions>
Reduce the moment of inertia ratio if high speed response operation is required.

Dimensions (Motor)

• MQMA 100W to 400W

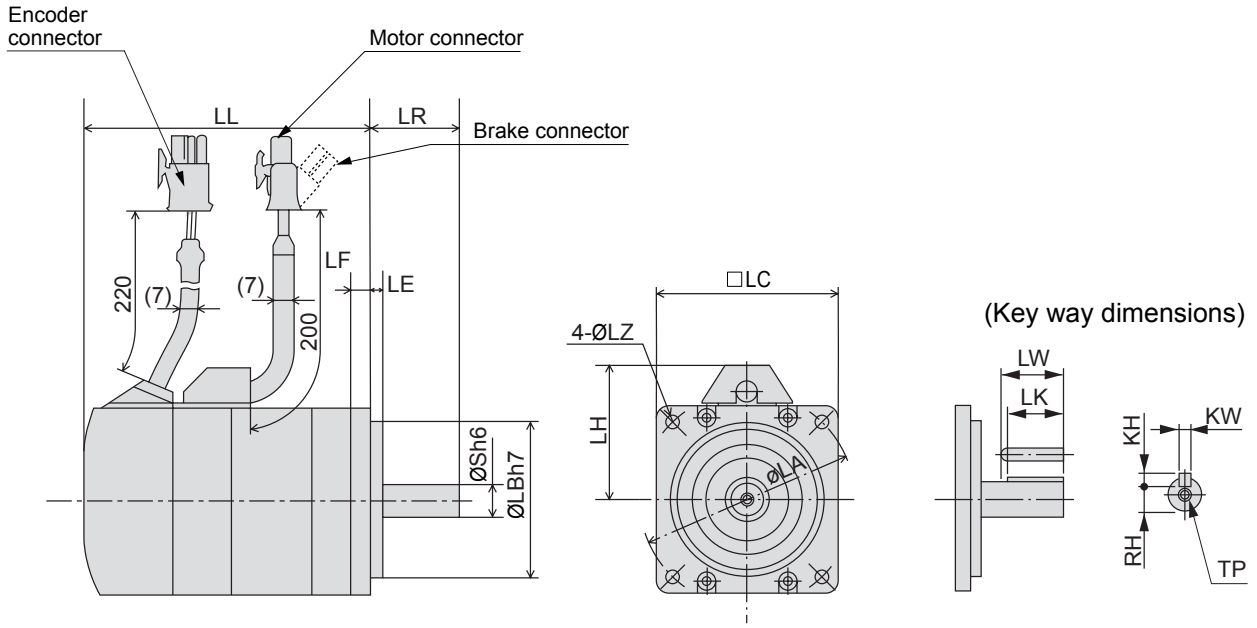

* Dimensions are subject to change without notice. Contact us or a dealer for the latest information.

		MQMA series (low inertia)					
Motor output		100W		200W		400W	
Motor model	MQMA	01 * P1 *	01 * S1 *	02 * P1 *	02 * S1 *	04 * P1 *	04 * S1 *
Rotary encoder specifications		2500P/r Incremental	17-bit Absolute/ Incremental	2500P/r Incremental	17-bit Absolute/ Incremental	2500P/r Incremental	17-bit Absolute/ Incremental
L L	Without brake	60	87	67	94	82	109
	With brake	84	111	99.5	126.5	114.5	141.5
L R		25		30		30	
S		8		11		14	
L A		70		90		90	
L B		50		70		70	
L C		60		80		80	
L D		—		—		—	
L E		3		5		5	
L F		7		8		8	
L G		—		—		—	
L H		43		53		53	
L Z		4.5		5.5		5.5	
Key way dimensions	L W	14		20		25	
	L K	12.5		18		22.5	
	K W	3h9		4h9		5h9	
	K H	3		4		5	
	R H	6.2		8.5		11	
	T P	M3 x 6(depth)		M4 x 8(depth)		M5 x 10(depth)	
Mass (kg)	Without brake	0.65	0.75	1.3	1.4	1.8	1.9
	With brake	0.90	1.00	2.0	2.1	2.5	2.6
Connector/Plug specifications		Refer to P.186, "Options".					

<Cautions>

Reduce the moment of inertia ratio if high speed response operation is required.

• MSMA 1.0kW to 2.0kW

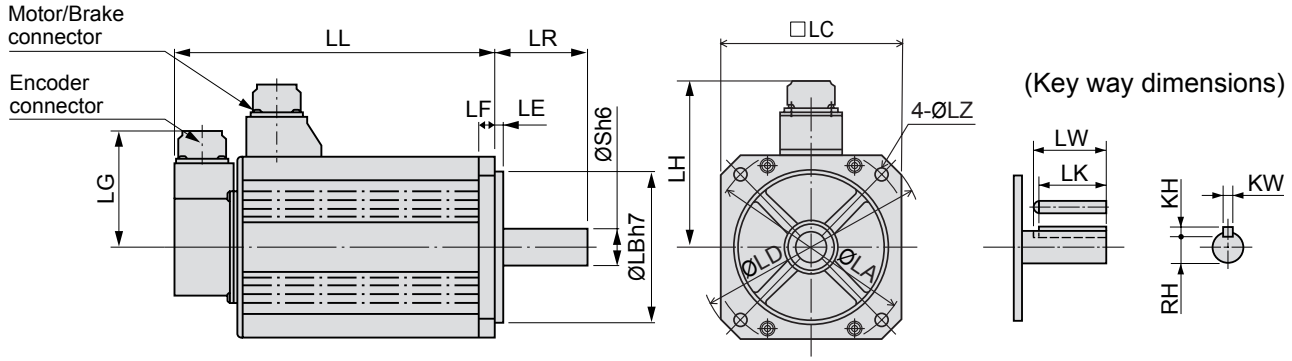

* Dimensions are subject to change without notice. Contact us or a dealer for the latest information.

		MSMA series (low inertia)					
Motor output		1.0kW		1.5kW		2.0kW	
Motor model MSMA		10 * P1 *	10 * S1 *	15 * P1 *	15 * S1 *	20 * P1 *	20 * S1 *
Rotary encoder specifications		2500P/r Incremental	17-bit Absolute/ Incremental	2500P/r Incremental	17-bit Absolute/ Incremental	2500P/r Incremental	17-bit Absolute/ Incremental
L L	Without brake	175	175	180	180	205	205
	With brake	200	200	205	205	230	230
L R		55		55		55	
S		19		19		19	
L A		100		115		115	
L B		80		95		95	
L C		90		100		100	
L D		120		135		135	
L E		3		3		3	
L F		7		10		10	
L G		84		84		84	
L H		98		103		103	
L Z		6.6		9		9	
Key way dimensions	L W	45		45		45	
	L K	42		42		42	
	K W	6h9		6h9		6h9	
	K H	6		6		6	
	R H	15.5		15.5		15.5	
Mass (kg)	Without brake	4.5	4.5	5.1	5.1	6.5	6.5
	With brake	5.1	5.1	6.5	6.5	7.9	7.9
Connector/Plug specifications		Refer to P.180, "Options".					

<Cautions>

Reduce the moment of inertia ratio if high speed response operation is required.

Dimensions (Motor)

• MSMA 3.0kW to 5.0kW

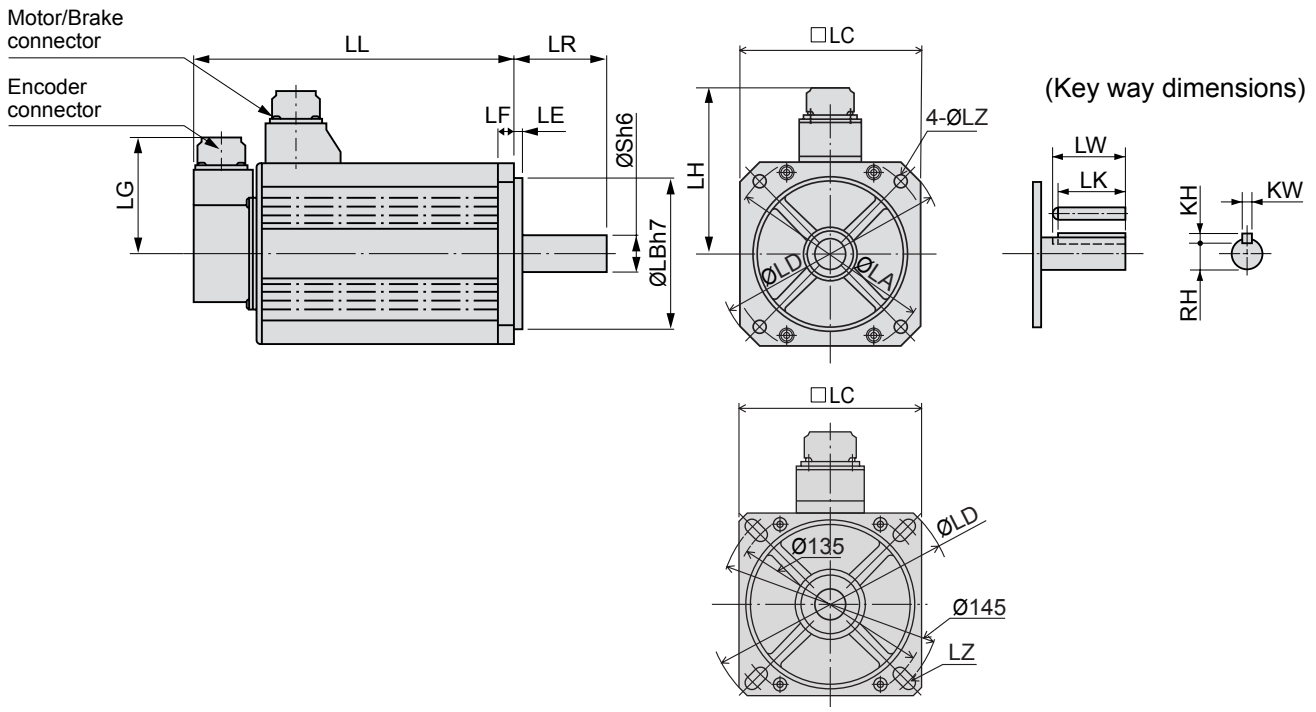

* Dimensions are subject to change without notice. Contact us or a dealer for the latest information.

		MSMA series (low inertia)					
Motor output		3.0kW		4.0kW		5.0kW	
Motor model	MSMA	30 * P1 *	30 * S1 *	40 * P1 *	40 * S1 *	50 * P1 *	50 * S1 *
Rotary encoder specifications		2500P/r Incremental	17-bit Absolute/ Incremental	2500P/r Incremental	17-bit Absolute/ Incremental	2500P/r Incremental	17-bit Absolute/ Incremental
L L	Without brake	217	217	240	240	280	280
	With brake	242	242	265	265	305	305
L R		55		65		65	
S		22		24		24	
L A		130/145 (slot)		145		145	
L B		110		110		110	
L C		120		130		130	
L D		162		165		165	
L E		3		6		6	
L F		12		12		12	
L G		84		84		84	
L H		111		118		118	
L Z		9		9		9	
Key way dimensions	L W	45		55		55	
	L K	41		51		51	
	K W	8h9		8h9		8h9	
	K H	7		7		7	
	R H	18		20		20	
Mass (kg)	Without brake	09.3	9.3	12.9	12.9	17.3	17.3
	With brake	11.0	11.0	14.8	14.8	19.2	19.2
Connector/Plug specifications		Refer to P.180, "Options".					

<Cautions>

Reduce the moment of inertia ratio if high speed response operation is required.

• MDMA 1.0kW to 1.5kW

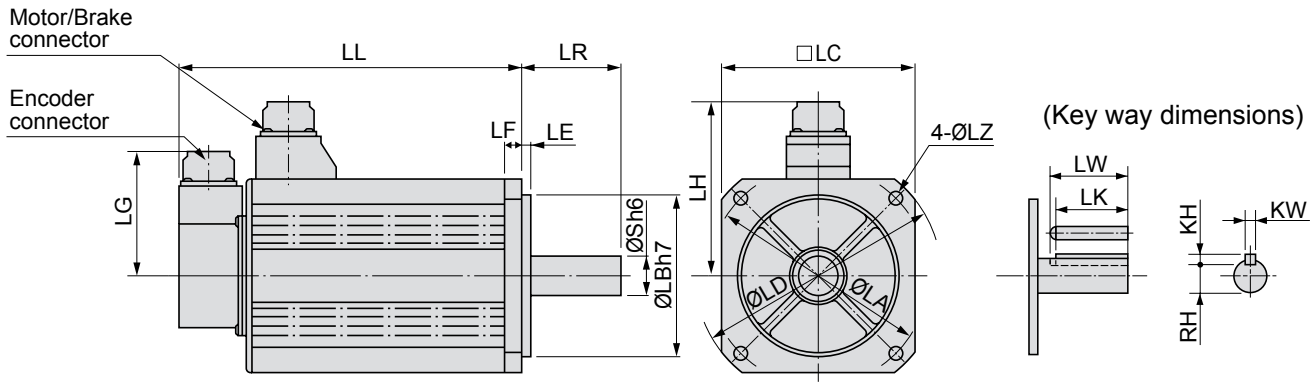

* Dimensions are subject to change without notice. Contact us or a dealer for the latest information.

		MDMA series (Middle inertia)			
Motor output		1.0kW		1.5kW	
Motor model	MDMA	10 * P1 *	10 * S1 *	15 * P1 *	15 * S1 *
Rotary encoder specifications		2500P/r Incremental	17-bit Absolute/Incremental	2500P/r Incremental	17-bit Absolute/Incremental
LL	Without brake	150	150	175	175
	With brake	175	175	200	200
LR		55		55	
S		22		22	
LA		145		145	
LB		110		110	
LC		130		130	
LD		165		165	
LE		6		6	
LF		12		12	
LG		84		84	
LH		118		118	
LZ		9		9	
Key way dimensions	LW	45		45	
	LK	41		41	
	KW	8h9		8h9	
	KH	7		7	
	RH	18		18	
Mass (kg)	Without brake	6.8	6.8	8.5	8.5
	With brake	8.7	8.7	10.1	10.1
Connector/Plug specifications		Refer to P.180, "Options".			

<Cautions>
Reduce the moment of inertia ratio if high speed response operation is required.

Dimensions (Motor)

• MDMA 2.0kW to 3.0kW

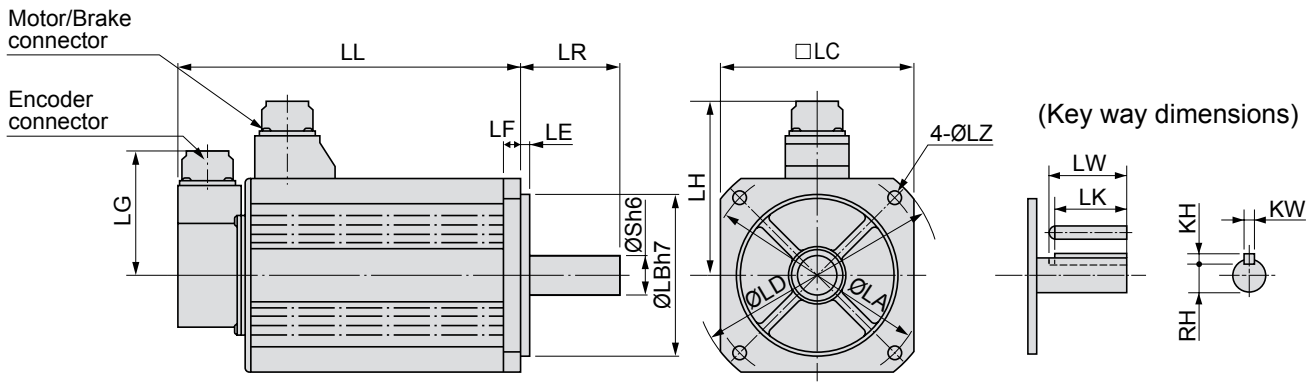

* Dimensions are subject to change without notice. Contact us or a dealer for the latest information.

		MDMA series (Middle inertia)			
Motor output		2.0kW		3.0kW	
Motor model	MDMA	20 * P1 *	20 * S1 *	30 * P1 *	30 * S1 *
Rotary encoder specifications		2500P/r Incremental	17-bit Absolute/Incremental	2500P/r Incremental	17-bit Absolute/Incremental
LL	Without brake	200	200	250	250
	With brake	225	225	275	275
LR		55		65	
S		22		24	
LA		145		145	
LB		110		110	
LC		130		130	
LD		165		165	
LE		6		6	
LF		12		12	
LG		84		84	
LH		118		118	
LZ		9		9	
Key way dimensions	LW	45		55	
	LK	41		51	
	KW	8h9		8h9	
	KH	7		7	
	RH	18		20	
Mass (kg)	Without brake	10.6	10.6	14.6	14.6
	With brake	12.5	12.5	16.5	16.5
Connector/Plug specifications		Refer to P.180, "Options".			

<Cautions>
Reduce the moment of inertia ratio if high speed response operation is required.

• MDMA 4.0kW to 5.0kW

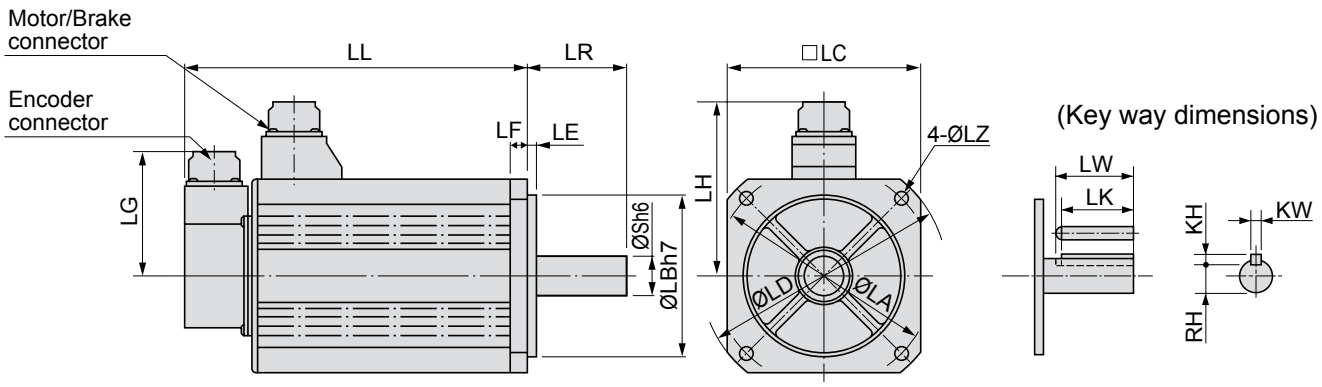

* Dimensions are subject to change without notice. Contact us or a dealer for the latest information.

		MDMA series (Middle inertia)			
Motor output		4.0kW		5.0kW	
Motor model MDMA		40 * P1 *	40 * S1 *	50 * P1 *	50 * S1 *
Rotary encoder specifications		2500P/r Incremental	17-bit Absolute/Incremental	2500P/r Incremental	17-bit Absolute/Incremental
L L	Without brake	242	242	225	225
	With brake	267	267	250	250
L R		65		70	
S		28		35	
L A		165		200	
L B		130		114.3	
L C		150		176	
L D		190		233	
L E		3.2		3.2	
L F		18		18	
L G		84		84	
L H		128		143	
L Z		11		13.5	
Key way dimensions	L W	55		55	
	L K	51		50	
	K W	8h9		10h9	
	K H	7		8	
	R H	24		30	
Mass (kg)	Without brake	18.8	18.8	25.0	25.0
	With brake	21.3	21.3	28.5	28.5
Connector/Plug specifications		Refer to P.180, "Options".			

<Cautions>
Reduce the moment of inertia ratio if high speed response operation is required.

Dimensions (Motor)

• MGMA 900W to 2.0kW

MGMA 900W to 2.0kW

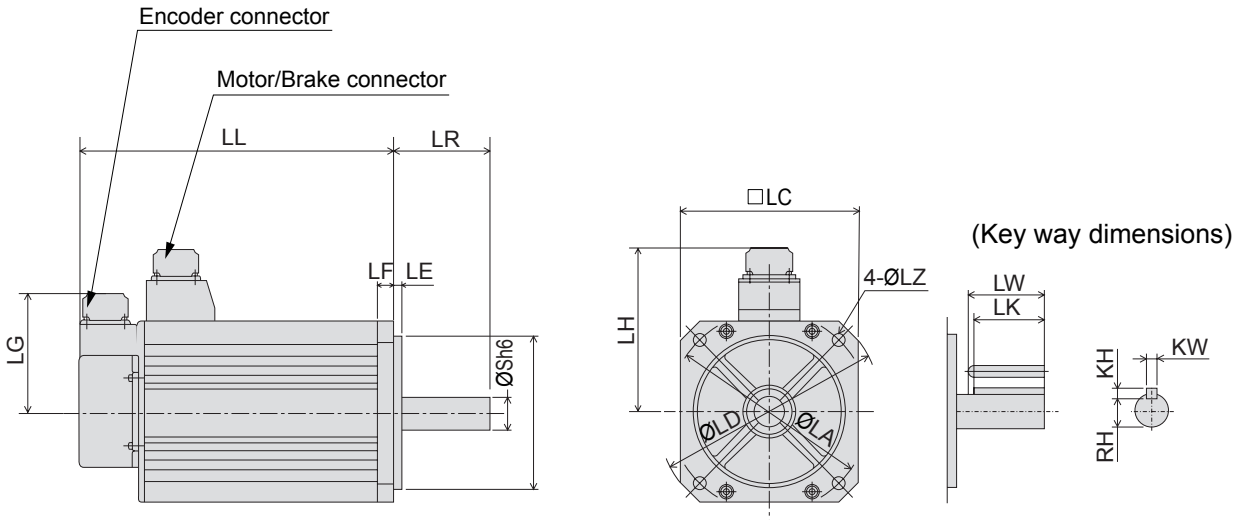

* Dimensions are subject to change without notice. Contact us or a dealer for the latest information.

		MGMA series (Middle inertia)			
Motor output		900W		2.0kW	
Motor model MGMA		09 * P1 *	09 * S1 *	20 * P1 *	20 * S1 *
Rotary encoder specifications		2500P/r Incremental	17-bit Absolute/Incremental	2500P/r Incremental	17-bit Absolute/Incremental
LL	Without brake	175	175	182	182
	With brake	200	200	207	207
LR		70		80	
S		22		35	
LA		145		200	
LB		110		114.3	
LC		130		176	
LD		165		233	
LE		6		3.2	
LF		12		18	
LG		84		84	
LH		118		143	
LZ		9		13.5	
Key way dimensions	LW	45		55	
	LK	41		50	
	KW	8h9		10h9	
	KH	7		8	
	RH	18		30	
Mass (kg)	Without brake	8.5	8.5	17.5	17.5
	With brake	10.0	10.0	21.0	21.0
Connector/Plug specifications		Refer to P.180, "Options".			

<Cautions>

Reduce the moment of inertia ratio if high speed response operation is required.

• MGMA 3.0kW to 4.5kW

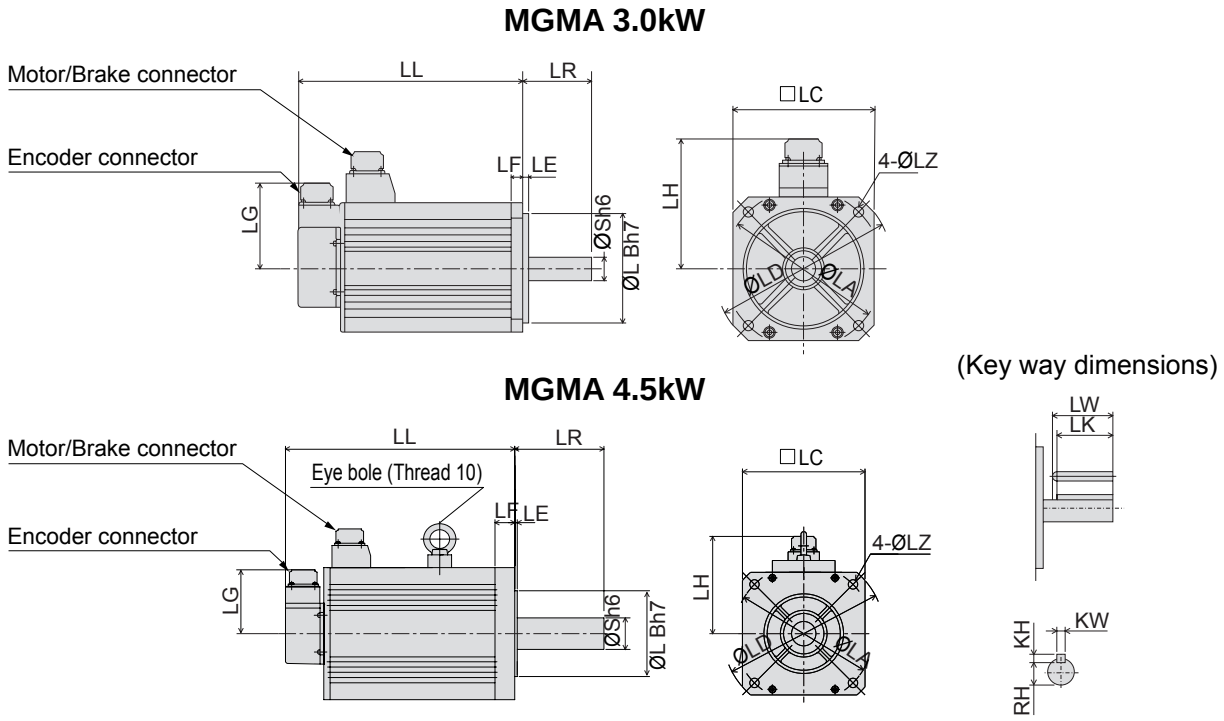

* Dimensions are subject to change without notice. Contact us or a dealer for the latest information.

		MGMA series (Middle inertia)			
Motor output		3.0kW		4.5kW	
Motor model MGMA		30 * P1 *	30 * S1 *	45 * P1 *	45 * S1 *
Rotary encoder specifications		2500P/r Incremental	17-bit Absolute/Incremental	2500P/r Incremental	17-bit Absolute/Incremental
L L	Without brake	222	222	300.5	300.5
	With brake	271	271	337.5	337.5
L R		80		113	
S		35		42	
L A		200		200	
L B		114.3		114.3	
L C		176		176	
L D		233		233	
L E		3.2		3.2	
L F		18		24	
L G		84		84	
L H		143		143	
L Z		13.5		13.5	
Key way dimensions	L W	55		96	
	L K	50		90	
	K W	10h9		12h9	
	K H	8		8	
	R H	30		37	
Mass (kg)	Without brake	25.0	25.0	34.0	34.0
	With brake	28.5	28.5	39.5	39.5
Connector/Plug specifications		Refer to P.180, "Options".			

<Cautions>

Reduce the moment of inertia ratio if high speed response operation is required.

Dimensions (Motor)

• MFMA 400W to 1.5kW

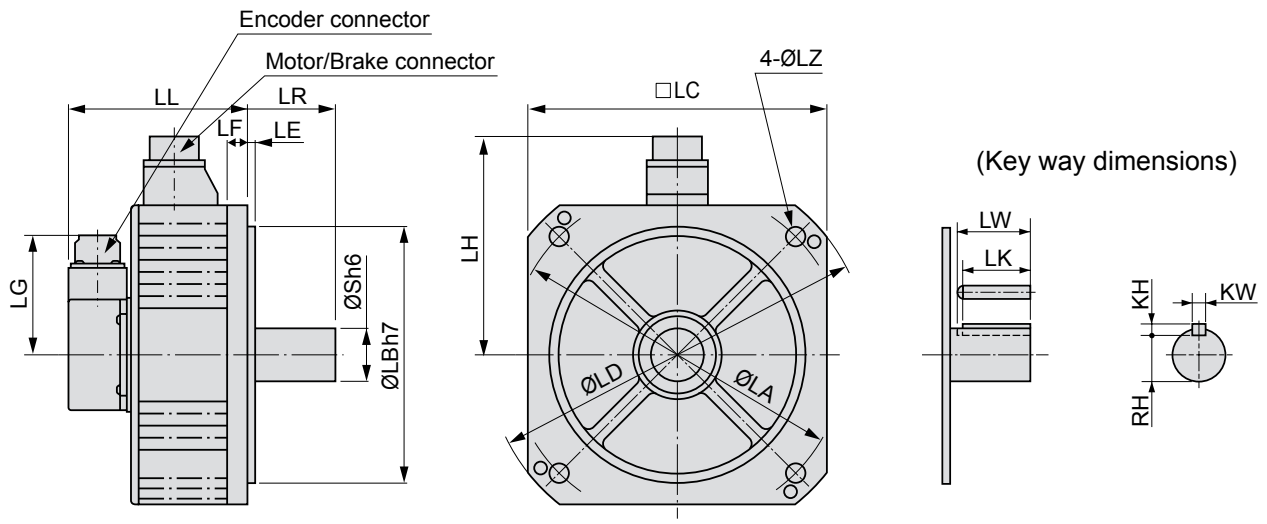

* Dimensions are subject to change without notice. Contact us or a dealer for the latest information.

		MFMA series (Middle inertia)			
Motor output		400W		1.5kW	
Motor model	MFMA	04 * P1 *	04 * S1 *	15 * P1 *	15 * S1 *
Rotary encoder specifications		2500P/r Incremental	17-bit Absolute/Incremental	2500P/r Incremental	17-bit Absolute/Incremental
L L	Without brake	120	120	145	145
	With brake	145	145	170	170
L R		55		65	
S		19		35	
L A		145		200	
L B		110		114.3	
L C		130		176	
L D		165		233	
L E		6		3.2	
L F		12		18	
L G		84		84	
L H		118		143	
L Z		9		13.5	
Key way dimensions	L W	45		55	
	L K	42		50	
	K W	6h9		10h9	
	K H	6		8	
	R H	15.5		30	
Mass (kg)	Without brake	4.7	4.7	11.0	11.0
	With brake	6.7	6.7	14.0	14.0
Connector/Plug specifications		Refer to P.180, "Options".			

<Cautions>
Reduce the moment of inertia ratio if high speed response operation is required.

• MFMA 2.5kW to 4.5kW

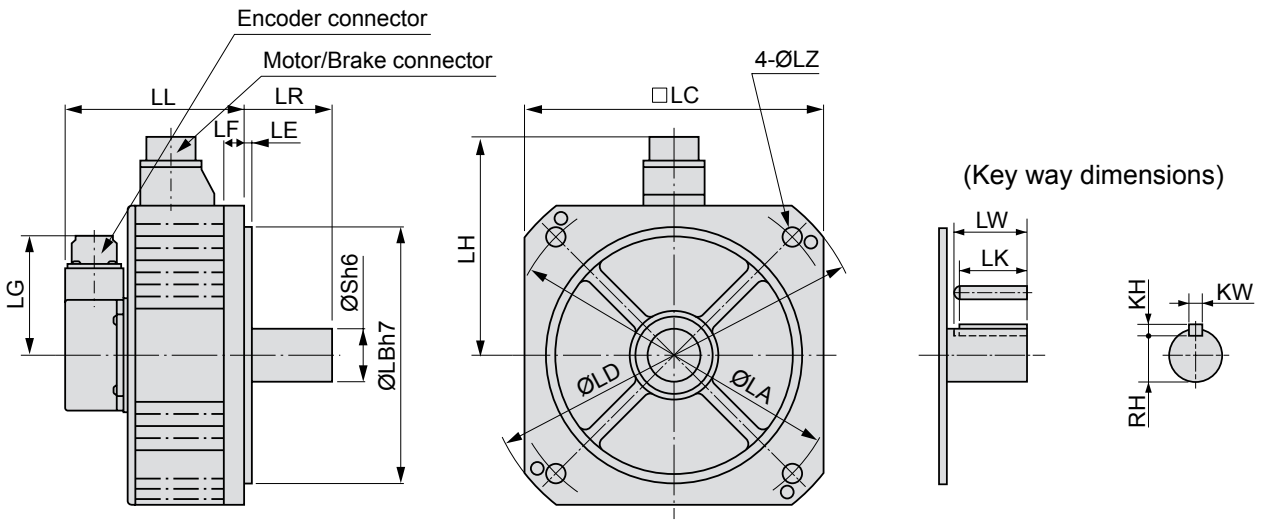

* Dimensions are subject to change without notice. Contact us or a dealer for the latest information.

		MFMA series (Middle inertia)			
Motor output		2.5kW		4.5kW	
Motor model MFMA		25 * P1 *	25 * S1 *	45 * P1 *	45 * S1 *
Rotary encoder specifications		2500P/r Incremental	17-bit Absolute/Incremental	2500P/r Incremental	17-bit Absolute/Incremental
L L	Without brake	139	139	163	163
	With brake	166	166	194	194
L R		65		70	
S		35		35	
L A		235		235	
L B		200		200	
L C		220		220	
L D		268		268	
L E		4		4	
L F		16		16	
L G		84		84	
L H		164		164	
L Z		13.5		13.5	
Key way dimensions	L W	55		55	
	L K	50		50	
	K W	10h9		10h9	
	K H	8		8	
	R H	30		30	
Mass (kg)	Without brake	14.8	14.8	19.9	19.9
	With brake	17.5	17.5	24.3	24.3
Connector/Plug specifications		Refer to P.180, "Options".			

<Cautions>
Reduce the moment of inertia ratio if high speed response operation is required.

Dimensions (Motor)

• MHMA 500W to 1.5kW

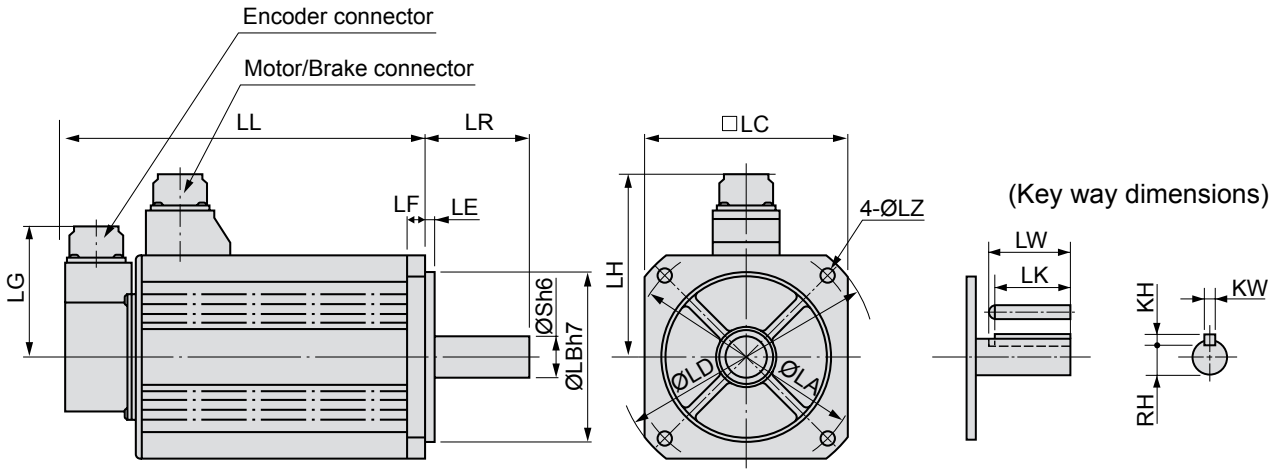

* Dimensions are subject to change without notice. Contact us or a dealer for the latest information.

		MHMA series (High inertia)					
Motor output		500W		1.0kW		1.5kW	
Motor model	MHMA	05 * P1 *	05 * S1 *	10 * P1 *	10 * S1 *	15 * P1 *	15 * S1 *
Rotary encoder specifications		2500P/r Incremental	17-bit Absolute/ Incremental	2500P/r Incremental	17-bit Absolute/ Incremental	2500P/r Incremental	17-bit Absolute/ Incremental
LL	Without brake	150	150	175	175	200	200
	With brake	175	175	200	200	225	225
LR		70		70		70	
S		22		22		22	
LA		145		145		145	
LB		110		110		110	
LC		130		130		130	
LD		165		165		165	
LE		6		6		6	
LF		12		12		12	
LG		84		84		84	
LH		118		118		118	
LZ		9		9		9	
Key way dimensions	LW	45		45		45	
	LK	41		41		41	
	KW	8h9		8h9		8h9	
	KH	7		7		7	
	RH	18		18		18	
Mass (kg)	Without brake	5.3	5.3	8.9	8.9	10.0	10.0
	With brake	6.9	6.9	9.5	9.5	11.6	11.6
Connector/Plug specifications		Refer to P.180, "Options".					

<Cautions>
Reduce the moment of inertia ratio if high speed response operation is required.

• MHMA 2.0kW to 5.0kW

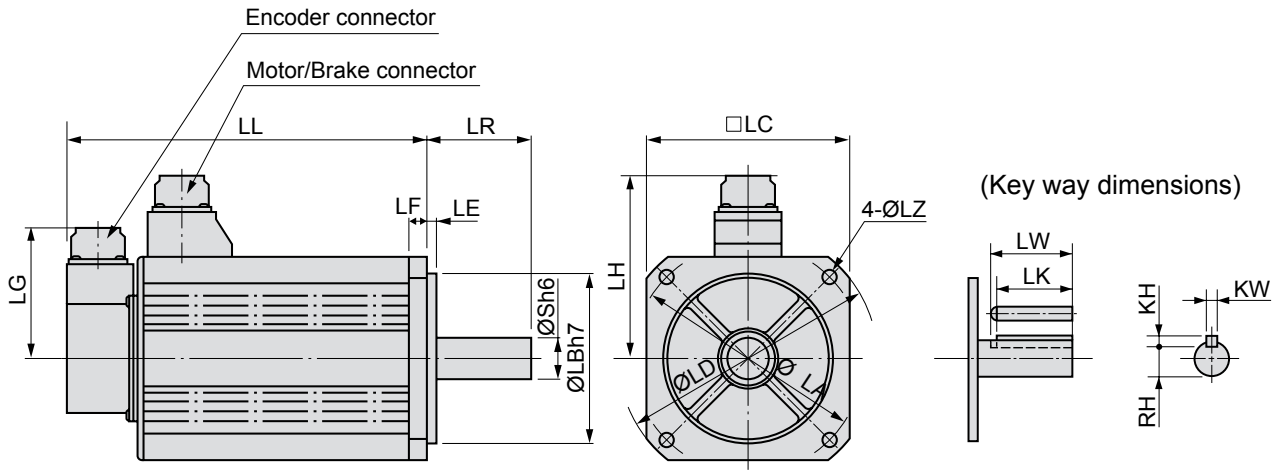

* Dimensions are subject to change without notice. Contact us or a dealer for the latest information.

		MHMA series (High inertia)							
Motor output		2.0kW		3.0kW		4.0kW		5.0kW	
Motor model MHMA		20 * P1 *	20 * S1 *	30 * P1 *	30 * S1 *	40 * P1 *	40 * S1 *	50 * P1 *	50 * S1 *
Rotary encoder specifications		2500P/r Incremental	17-bit Absolute/ Incremental	2500P/r Incremental	17-bit Absolute/ Incremental	2500P/r Incremental	17-bit Absolute/ Incremental	2500P/r Incremental	17-bit Absolute/ Incremental
LL	Without brake	190	190	205	205	230	230	255	255
	With brake	215	215	230	230	255	255	280	280
LR		80		80		80		80	
S		35		35		35		35	
LA		200		200		200		200	
LB		114.3		114.3		114.3		114.3	
LC		176		176		176		176	
LD		233		233		233		233	
LE		3.2		3.2		3.2		3.2	
LF		18		18		18		18	
LG		84		84		84		84	
LH		143		143		143		143	
LZ		13.5		13.5		13.5		13.5	
Key way dimensions	LW	55		55		55		55	
	LK	50		50		50		50	
	KW	10h9		10h9		10h9		10h9	
	KH	8		8		8		8	
	RH	30		30		30		30	
Mass (kg)	Without brake	16.0	16.0	18.2	18.2	22.0	22.0	26.7	26.7
	With brake	19.5	19.5	21.7	21.7	25.5	25.5	30.2	30.2
Connector/Plug specifications		Refer to P.180, "Options".							

<Cautions>

Reduce the moment of inertia ratio if high speed response operation is required.

Permissible Load at Output Shaft

Radial load (P) direction

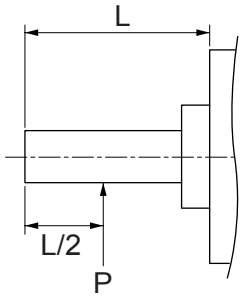

Thrust load (A and B) direction

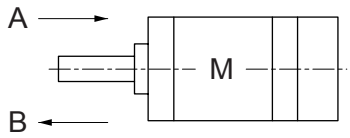

Unit : N (1kgf=9.8N)

Motor series	Motor output	At assembly			During running	
		Radial thrust	Thrust load		Radial thrust	Thrust load A and B-direction
			A-direction	B-direction		
MSMD	50W, 100W	147	88	117.6	68.6	58.8
	200W, 400W	392	147	196	245	98
	750W	686	294	392	392	147
MSMA	1kW	686	392	490	392	147
	1.5kW to 3.0kW	980	588	686	490	196
	4.0kW to 5.0kW				784	343
MQMA	100W	147	88	117.6	68.6	58.8
	200W, 400W	392	147	196	245	98
MDMA	1.0kW to 2.0kW	980	588	686	490	196
	3.0kW				784	343
	4.0kW	1666	784	980		
	5.0kW					
MHMA	500W to 1.5kW	980	588	686	490	196
	2.0kW to 5.0kW	1666	784	980	784	343
MFMA	400W	980	588	686	392	147
	1.5kW				490	196
	2.5kW, 4.5kW	1862	686		784	294
MGMA	900W	980	588		686	196
	2.0kW	1666	784	980	1176	490
	3.0kW, 4.5kW	2058	980	1176	1470	

<Note>

When the load point varies, calculate the permissible radial load, P (N) from the distance of the load point, L (mm) from the mounting flange based on the formula of the right table, and make it smaller than the calculated result.

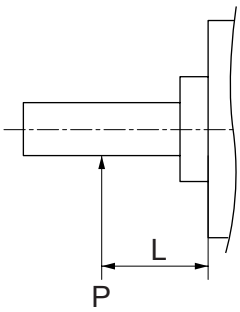

Motor series	Motor output	Formula of Load and load point relation
MSMD	50W	$P = \frac{3533}{L+39}$
	100W	$P = \frac{4905}{L+59}$
	200W	$P = \frac{14945}{L+46}$
	400W	$P = \frac{19723}{L+65.5}$
	750W	$P = \frac{37044}{L+77}$

Motor Characteristics (S-T Characteristics) [Supplement]

- Note that the motor characteristics may vary due to the existence of oil seal or brake. ˜
- Continuous torque vs. ambient temperature characteristics have been measured with an aluminum flange attached to the motor (approx. twice as large as the motor flange).

MQMA series (100W to 400W)

With and without oil seal

• MQMA011 * 1 *

Input voltage to driver: AC100V (Dotted line represents torque at 10% less voltage.)

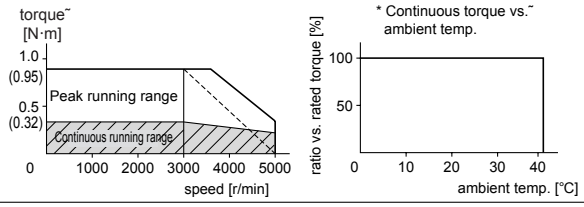

• MQMA012 * 1 *

Input voltage to driver: AC200V (Dotted line represents torque at 10% less voltage.)

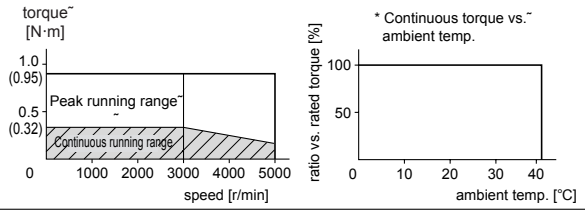

• MQMA021 * 1 *

Input voltage to driver: AC100V (Dotted line represents torque at 10% less voltage.)

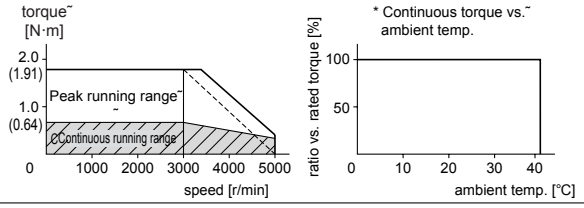

• MQMA022 * 1 *

Input voltage to driver: AC200V (Dotted line represents torque at 10% less voltage.)

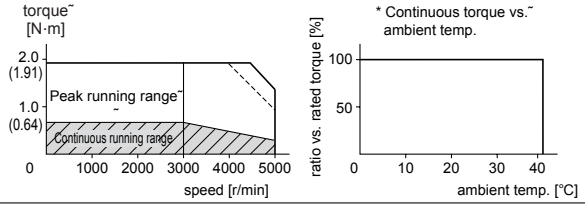

• MQMA041 * 1 *

Input voltage to driver: AC100V (Dotted line represents torque at 10% less voltage.)

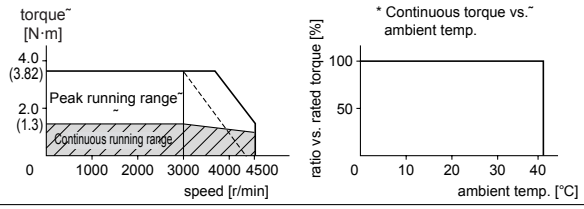

• MQMA042 * 1 *

Input voltage to driver: AC200V (Dotted line represents torque at 10% less voltage.)

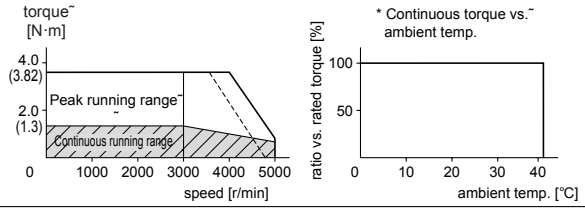

MAMA series (100W to 750W)

without oil seal

• MAMA012 * 1 *

Input voltage to driver: AC200V

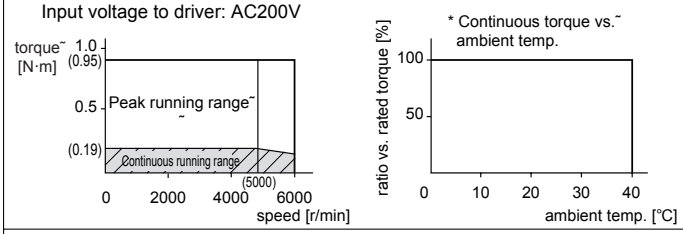

• MAMA022 * 1 *

Input voltage to driver: AC200V

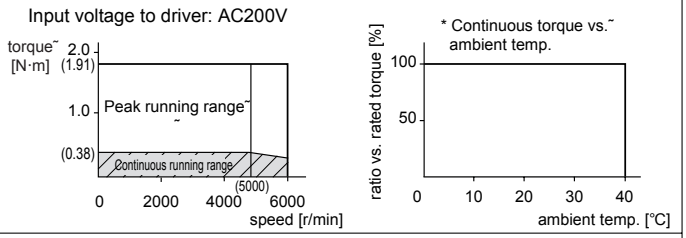

• MAMA042 * 1 *

Input voltage to driver: AC200V

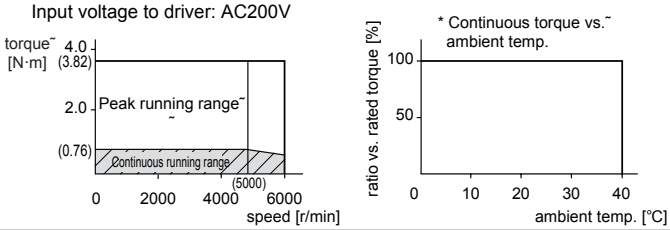

• MAMA082 * 1 *

Input voltage to driver: AC200V

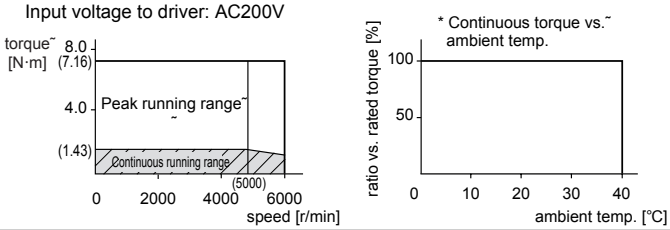

* These are subject to change. Contact us when you use these values for your machine design.˜

* Ratio to the rated torque at ambient temperature of 40°C is 100% in case of without oil seal, without brake.

- When you lower the torque limit setup (Pr5E and 5F), running range at high speed might be lowered as well.

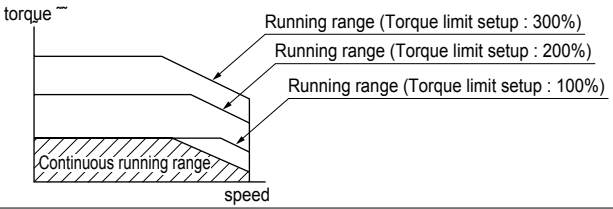

Supplement

Motor Characteristics (S-T Characteristics)

MSMD series (50W to 100W)

without oil seal

• MSMD5AZ * 1 *

Input voltage to driver: AC100V/200V˜

(Dotted line represents torque at 10% less voltage.)

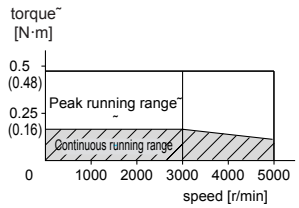

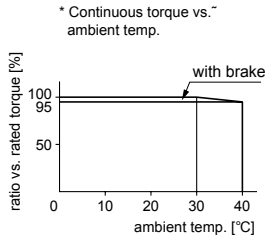

with oil seal

• MSMD5AZ * 1 *

Input voltage to driver: AC100V/200V˜

(Dotted line represents torque at 10% less voltage.)

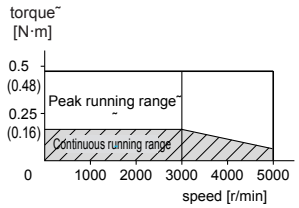

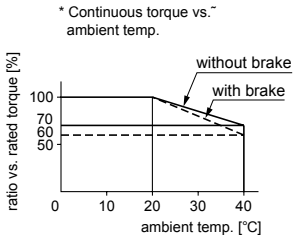

• MSMD011 * 1 *

Input voltage to driver: AC100V˜

(Dotted line represents torque at 10% less voltage.)

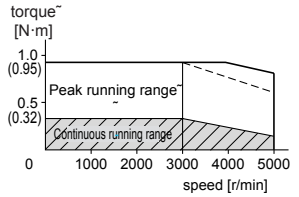

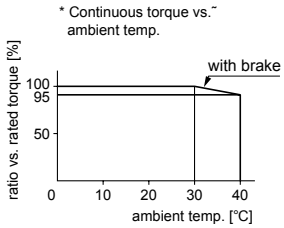

• MSMD011 * 1 *

Input voltage to driver: AC100V˜

(Dotted line represents torque at 10% less voltage.)

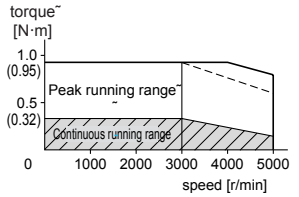

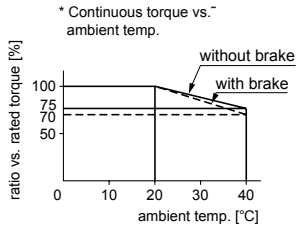

• MSMD012 * 1 *

Input voltage to driver: AC200V

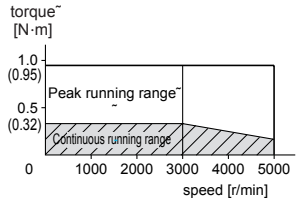

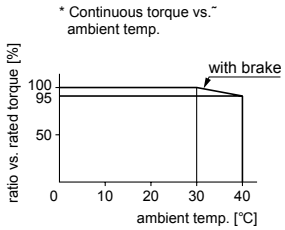

• MSMD012 * 1 *

Input voltage to driver: AC200V

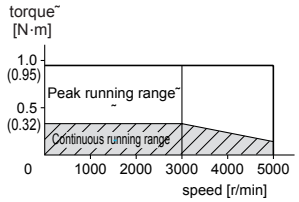

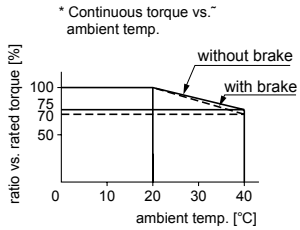

* These are subject to change. Contact us when you use these values for your machine design.˜
* Ratio to the rated torque at ambient temperature of 40°C is 100% in case of without oil seal, without brake.

• When you lower the torque limit setup (Pr5E and 5F), ˜ running range at high speed might be lowered as well.

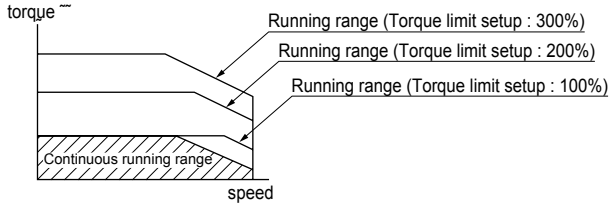

MSMD series (200W to 750W)

without oil seal

• MSMD021 * 1 *
Input voltage to driver: AC100V~
(Dotted line represents torque at 10% less voltage.)

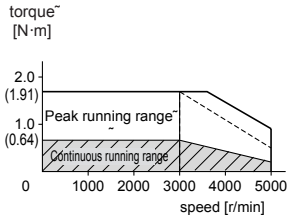

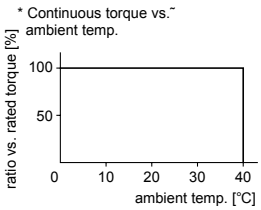

• MSMD022 * 1 *
Input voltage to driver: AC200V~
(Dotted line represents torque at 10% less voltage.)

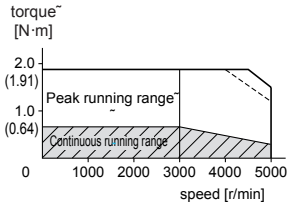

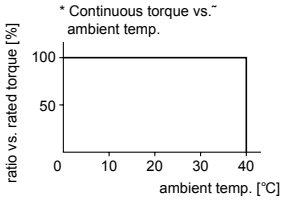

• MSMD041 * 1 *
Input voltage to driver: AC100V~
(Dotted line represents torque at 10% less voltage.)

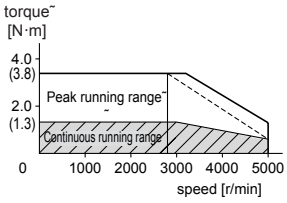

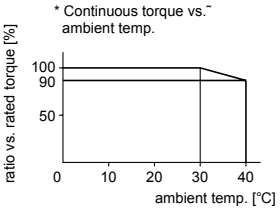

• MSMD042 * 1 *
Input voltage to driver: AC200V~
(Dotted line represents torque at 10% less voltage.)

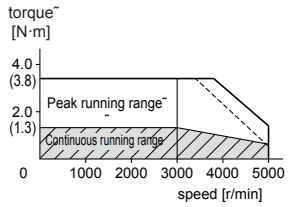

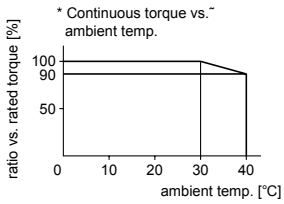

• MSMD082 * 1 *
Input voltage to driver: AC200V~
(Dotted line represents torque at 10% less voltage.)

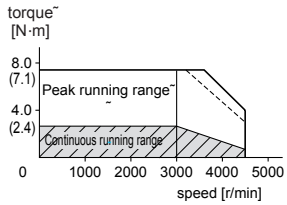

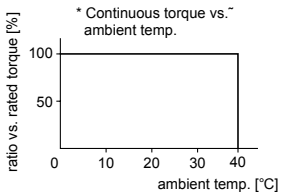

With oil seal

• MSMD021 * 1 *
Input voltage to driver: AC100V~
(Dotted line represents torque at 10% less voltage.)

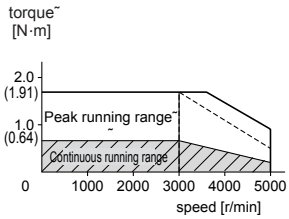

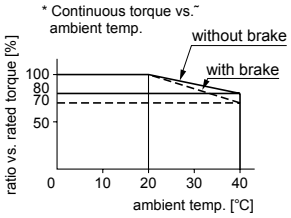

• MSMD022 * 1 *
Input voltage to driver: AC200V~
(Dotted line represents torque at 10% less voltage.)

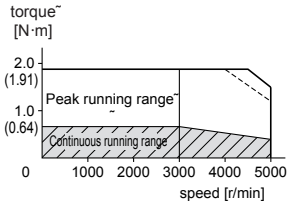

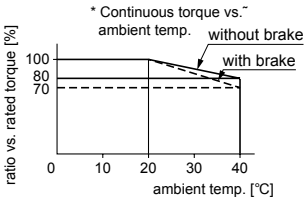

• MSMD041 * 1 *
Input voltage to driver: AC100V~
(Dotted line represents torque at 10% less voltage.)

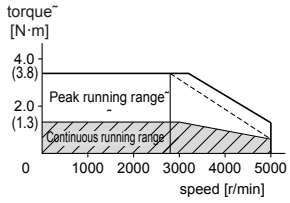

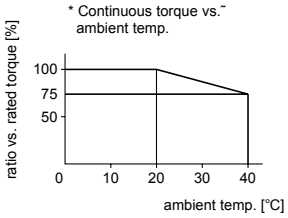

• MSMD042 * 1 *
Input voltage to driver: AC200V~
(Dotted line represents torque at 10% less voltage.)

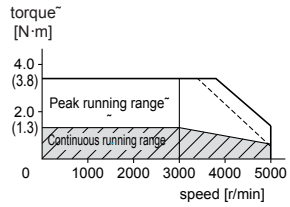

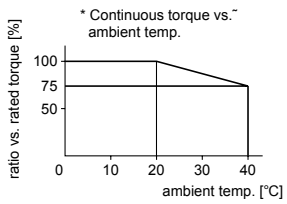

• MSMD082 * 1 *
Input voltage to driver: AC200V~
(Dotted line represents torque at 10% less voltage.)

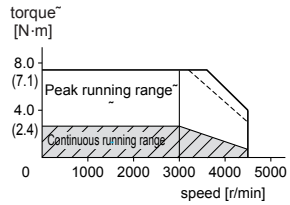

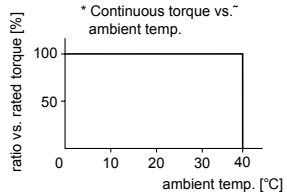

* These are subject to change. Contact us when you use these values for your machine design.

CTi Automation - Phone: 800.894.0412 - Fax: 208.368.0415 - Web: www.ctiautomation.net - Email: info@ctiautomation.net

Motor Characteristics (S-T Characteristics)

MSMA series (1.0kW to 5.0kW)

With oil seal

• MSMA102 * 1 *
Input voltage to driver: AC200V˜
(Dotted line represents torque at 10% less voltage.)

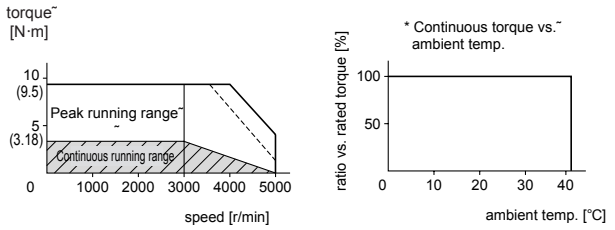

• MSMA152 * 1 *
Input voltage to driver: AC200V˜
(Dotted line represents torque at 10% less voltage.)

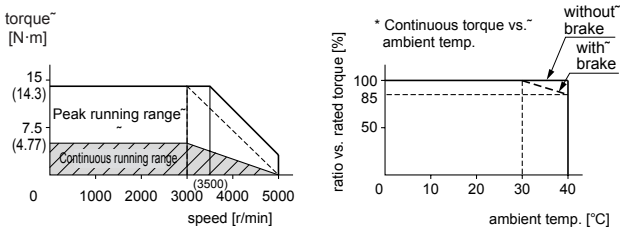

• MSMA202 * 1 *
Input voltage to driver: AC200V˜
(Dotted line represents torque at 10% less voltage.)

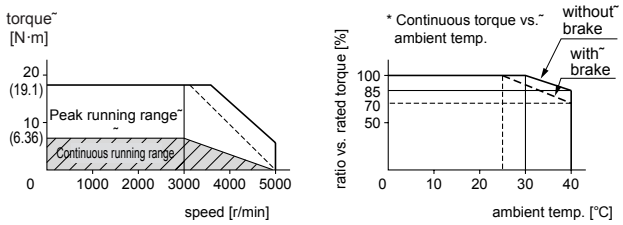

• MSMA302 * 1 *
Input voltage to driver: AC200V˜
(Dotted line represents torque at 10% less voltage.)

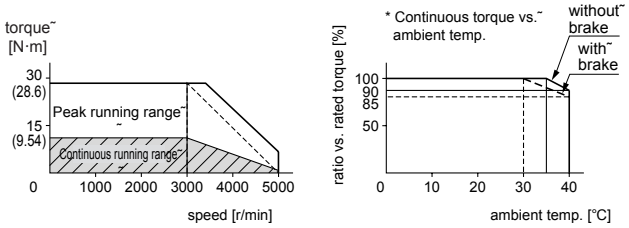

• MSMA402 * 1 *
Input voltage to driver: AC200V˜
(Dotted line represents torque at 10% less voltage.)

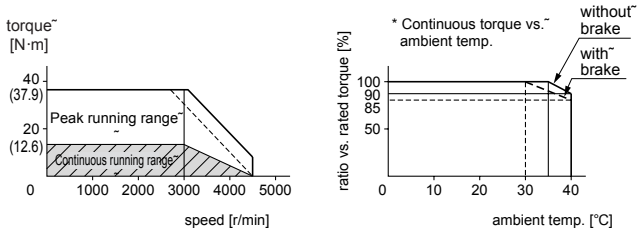

• MSMA502 * 1 *
Input voltage to driver: AC200V˜
(Dotted line represents torque at 10% less voltage.)

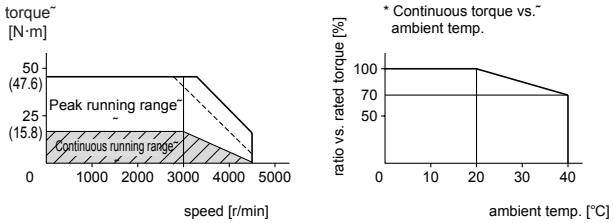

MDMA series (1.0kW to 2.0kW)

With oil seal

• MDMA102 * 1 *
Input voltage to driver: AC200V˜
(Dotted line represents torque at 10% less voltage.)

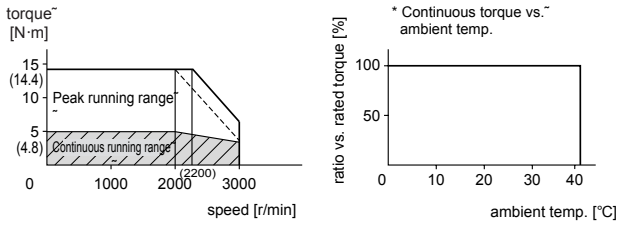

• MDMA152 * 1 *
Input voltage to driver: AC200V˜
(Dotted line represents torque at 10% less voltage.)

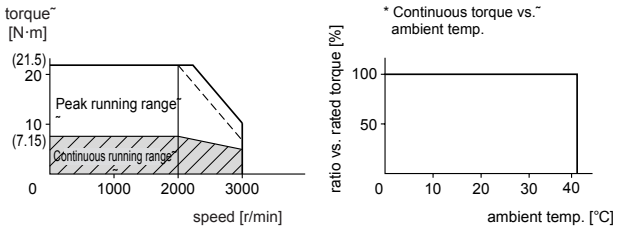

• MDMA202 * 1 *
Input voltage to driver: AC200V˜
(Dotted line represents torque at 10% less voltage.)

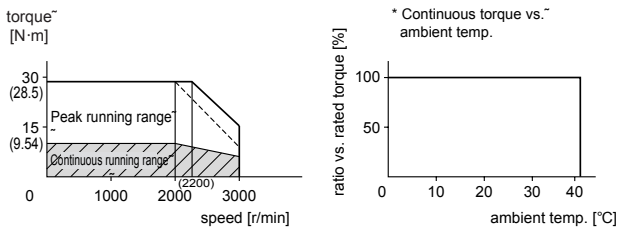

* These are subject to change. Contact us when you use these values for your machine design.

MDMA series (3.0kW to 5.0kW)

With oil seal

• MDMA302 * 1 *
Input voltage to driver: AC200V˜
(Dotted line represents torque at 10% less voltage.)

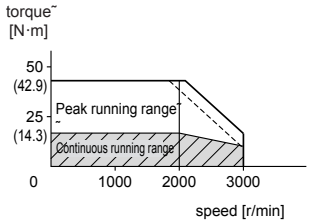

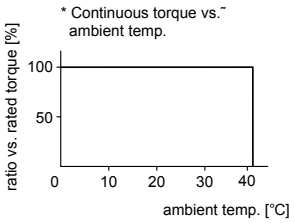

• MDMA402 * 1 *
Input voltage to driver: AC200V˜
(Dotted line represents torque at 10% less voltage.)

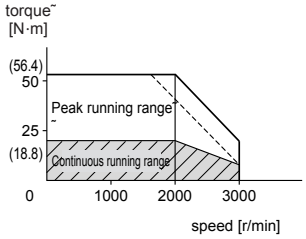

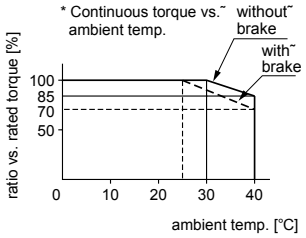

• MDMA502 * 1 *
Input voltage to driver: AC200V˜
(Dotted line represents torque at 10% less voltage.)

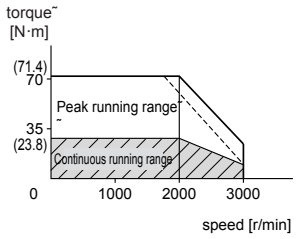

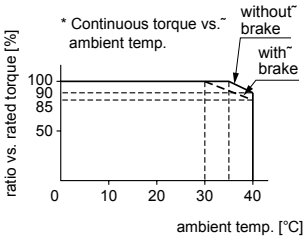

MFMA series (400W to 4.5kW)

With oil seal

• MFMA042 * 1 *
Input voltage to driver: AC200V˜
(Dotted line represents torque at 10% less voltage.)

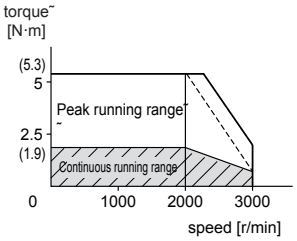

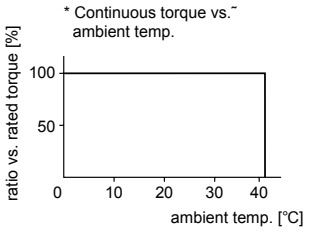

• MFMA152 * 1 *
Input voltage to driver: AC200V˜
(Dotted line represents torque at 10% less voltage.)

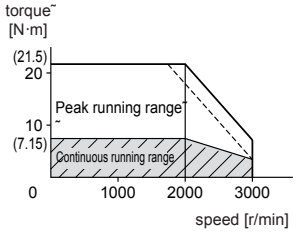

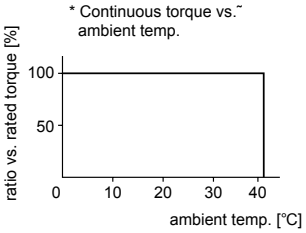

• MFMA252 * 1 *
Input voltage to driver: AC200V˜
(Dotted line represents torque at 10% less voltage.)

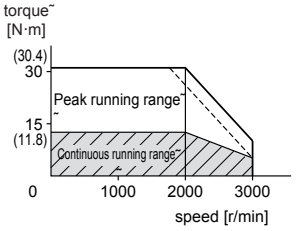

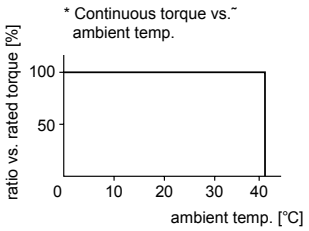

• MFMA452 * 1 *
Input voltage to driver: AC200V˜
(Dotted line represents torque at 10% less voltage.)

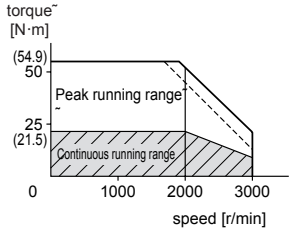

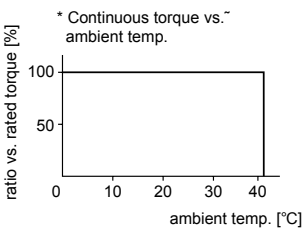

* These are subject to change. Contact us when you use these values for your machine design.

• When you lower the torque limit setup (Pr5E and 5F), ˜ running range at high speed might be lowered as well.

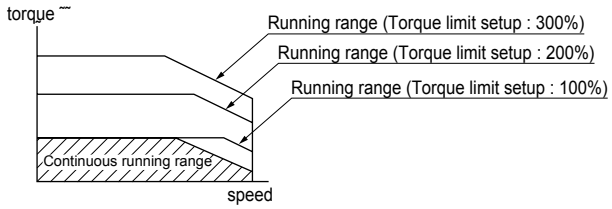

Motor Characteristics (S-T Characteristics)

MHMA series (500W to 5.0kW)

With oil seal

• MHMA052 * 1 *

Input voltage to driver: AC200V˜

(Dotted line represents torque at 10% less voltage.)

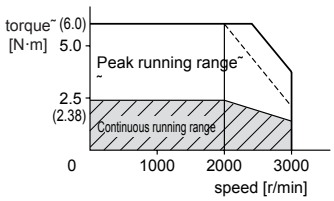

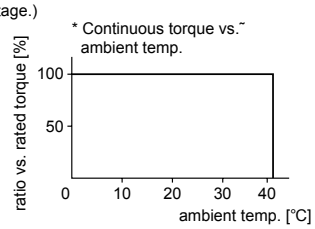

• MHMA102 * 1 *

Input voltage to driver: AC200V˜

(Dotted line represents torque at 10% less voltage.)

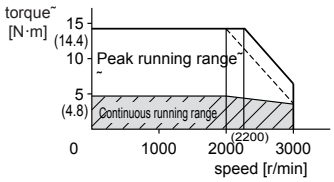

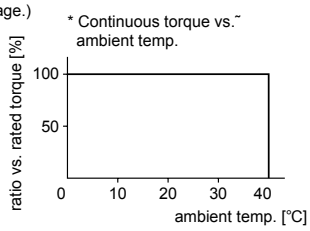

• MHMA152 * 1 *

Input voltage to driver: AC200V˜

(Dotted line represents torque at 10% less voltage.)

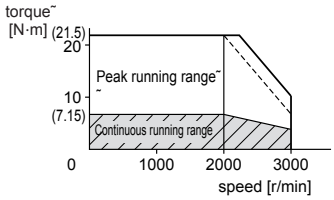

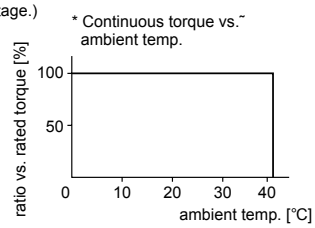

• MHMA202 * 1 *

Input voltage to driver: AC200V˜

(Dotted line represents torque at 10% less voltage.)

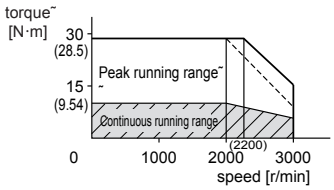

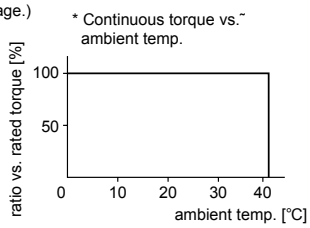

• MHMA302 * 1 *

Input voltage to driver: AC200V˜

(Dotted line represents torque at 10% less voltage.)

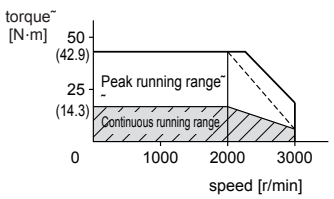

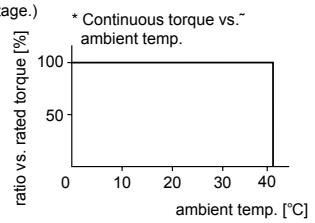

• MHMA402 * 1 *

Input voltage to driver: AC200V˜

(Dotted line represents torque at 10% less voltage.)

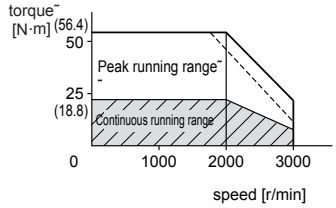

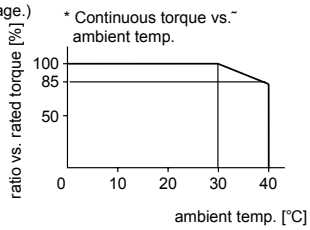

• MHMA502 * 1 *

Input voltage to driver: AC200V˜

(Dotted line represents torque at 10% less voltage.)

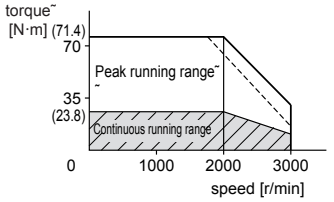

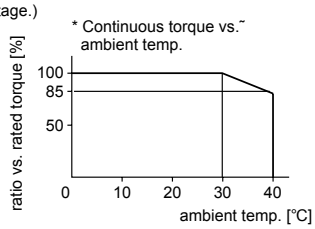

• When you lower the torque limit setup (Pr5E and 5F), ˜ running range at high speed might be lowered as well.

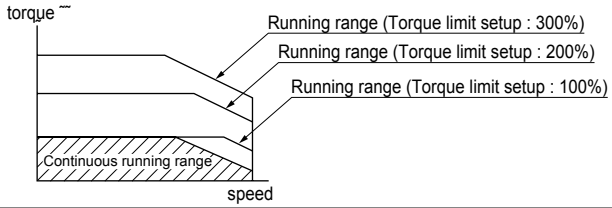

MGMA series (900W to 4.5kW)

With oil seal

• MGMA092 * 1 *

Input voltage to driver: AC200V˜

(Dotted line represents torque at 10% less voltage.)

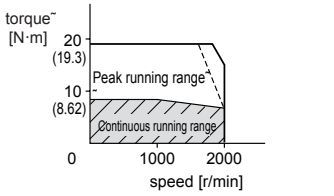

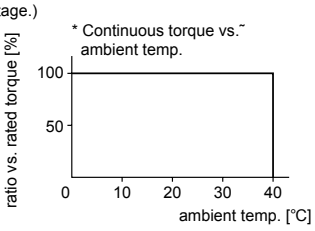

• MGMA202 * 1 *

Input voltage to driver: AC200V˜

(Dotted line represents torque at 10% less voltage.)

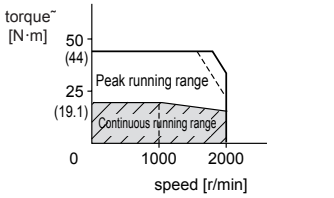

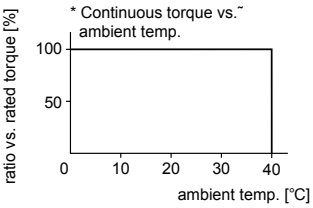

• MGMA302 * 1 *

Input voltage to driver: AC200V˜

(Dotted line represents torque at 10% less voltage.)

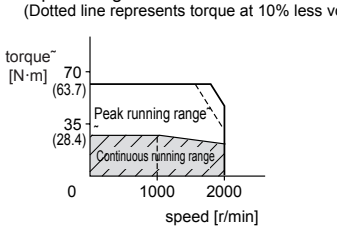

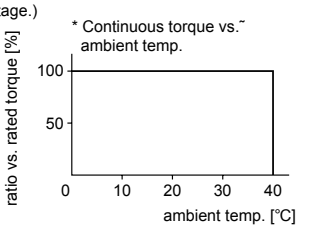

• MGMA452 * 1 *

Input voltage to driver: AC200V˜

(Dotted line represents torque at 10% less voltage.)

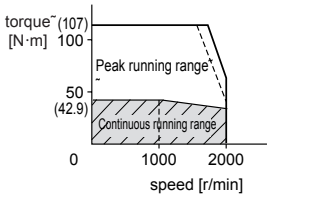

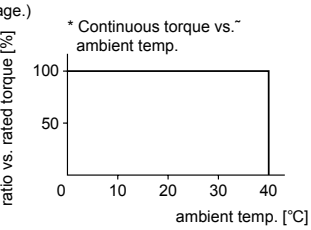

* These are subject to change. Contact us when you use these values for your machine design.

Model No. of Motor with Gear Reduce

Model Designation

M S M D 0 1 1 P 3 1 N

1~4 | 5~6 | 7 | 8 | 9 | 10

Symbol	Type
MSMD	Low inertia

Motor rated output

Symbol	Output
01~	100W~
02~	200W~
04~	400W~
08	750W

Voltage ~ specifications

Symbol	Specifications
1~	100V~
2	200V

Reduction ratio

Symbol	Reduction ratio
1N~	1/5~
2N~	1/9~
3N~	1/15~
4N	1/25

Rotary encoder specifications

Symbol	Specifications			
	Format	Pulse count	Resolution	Wire count
P~	Incremental~	2500P/r~	10,000~	5-wire~
S	Absolute/Incremental common	17bit	131,072	7-wire

Motor structure

Symbol	Holding brake		Shaft
	Without	With	Key way
3~	●		●
4		●	●

Combination of Driver and Motor with Gear Reducer

This driver is designed to be used in the combination with the specified motor model.
Check the series name, rated output and voltage specifications and the encoder specifications of the applicable motor.

Incremental Specifications, 2500P/r

<Remark>

Do not use the driver and the motor with gear reducer in other combinations than the one in the following table.

• Incremental specifications, 2500P/r

	Applicable motor with gear reducer					Applicable driver	
Power supply	Rated output of motor	Reduction ratio of 1/5	Reduction ratio of 1/9	Reduction ratio of 1/15	Reduction ratio of 1/25	Model No. of driver	Frame of driver
Single phase, 100V	100W	MSMD011P * 1N	MSMD011P * 2N	MSMD011P * 3N	MSMD011P * 4N	MADDT1107P	A-frame
	200W	MSMD021P * 1N	MSMD021P * 2N	MSMD021P * 3N	MSMD021P * 3N	MBDDT2110P	B-frame
	400W	MSMD041P * 1N	MSMD041P * 2N	MSMD041P * 3N	MSMD041P * 4N	MCDDT3120P	C-frame
Single phase, 200V	100W	MSMD012P * 1N	MSMD012P * 2N	MSMD012P * 3N	MSMD012P * 4N	MADDT1205P	A-frame
	200W	MSMD022P * 1N	MSMD022P * 2N	MSMD022P * 3N	MSMD022P * 3N	MADDT1207P	
	400W	MSMD042P * 1N	MSMD042P * 2N	MSMD042P * 3N	MSMD042P * 4N	MBDDT2210P	B-frame
	750W	MSMD082P * 1N	MSMD082P * 2N	MSMD082P * 3N	MSMD082P * 4N	MCDDT3520P	C-frame
3-phase, 200V	750W	MSMD082P * 1N	MSMD082P * 2N	MSMD082P * 3N	MSMD082P * 4N	MCDDT3520P	C-frame

• Absolute/Incremental specifications, 17bit

	Applicable motor with gear reducer					Applicable driver	
Power supply	Rated output of motor	Reduction ratio of 1/5	Reduction ratio of 1/9	Reduction ratio of 1/15	Reduction ratio of 1/25	Model No. of driver	Frame of driver
Single phase, 100V	100W	MSMD011S * 1N	MSMD011S * 2N	MSMD011S * 3N	MSMD011S * 4N	MADDT1107P	A-frame
	200W	MSMD021S * 1N	MSMD021S * 2N	MSMD021S * 3N	MSMD021S * 3N	MBDDT2110P	B-frame
	400W	MSMD041S * 1N	MSMD041S * 2N	MSMD041S * 3N	MSMD041S * 4N	MCDDT3120P	C-frame
Single phase, 200V	100W	MSMD012S * 1N	MSMD012S * 2N	MSMD012S * 3N	MSMD012S * 4N	MADDT1205P	A-frame
	200W	MSMD022S * 1N	MSMD022S * 2N	MSMD022S * 3N	MSMD022S * 3N	MADDT1207P	
	400W	MSMD042S * 1N	MSMD042S * 2N	MSMD042S * 3N	MSMD042S * 4N	MBDDT2210P	B-frame
	750W	MSMD082S * 1N	MSMD082S * 2N	MSMD082S * 3N	MSMD082S * 4N	MCDDT3520P	C-frame
3-phase, 200V	750W	MSMD082S * 1N	MSMD082S * 2N	MSMD082S * 3N	MSMD082S * 4N	MCDDT3520P	C-frame

<Note>

• "*" of the model No. represents the structure of the motor.

Dimensions/Motor with Gear Reducer

Motor with Gear Reducer

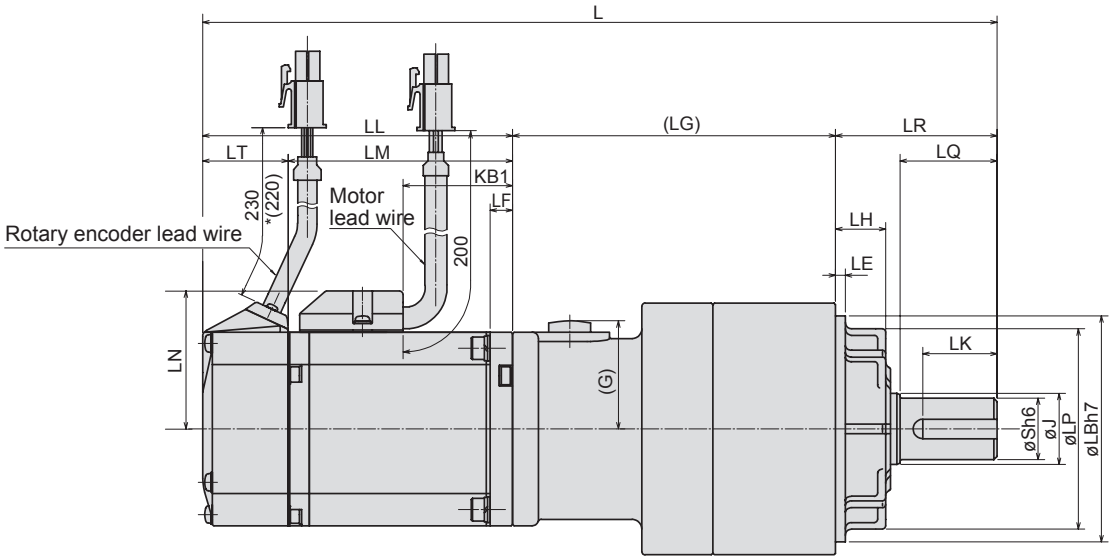

(unit : mm)

		Model	Motor output	Reduction rati0	L	LL	LM	LT	KB1	LF	LR	LQ	LB	S	LP	LH	J	(LG)	LE	(G)
MSMD	Without brake	MSMD01 * P31N	100W	1/5	191.5	92	68	24	40.8	6	32	20	50	12	45	10	14	67.5	3	25
		MSMD01 * P32N		1/9																
		MSMD01 * P33N		1/15	202													78		
		MSMD01 * P34N		1/25	234						50	30	70	19	62	17	22	92		
		MSMD02 * P31N	200W	1/5	183.5	79	56.5	22.5	22.5	6.5	32	20	50	12	45	10	14	72.5		34
		MSMD02 * P32N		1/9	218.5						50	30	70	19	62	17	22	89.5		
		MSMD02 * P33N		1/15	229													100		
		MSMD02 * P34N		1/25																
		MSMD04 * P31N	400W	1/5	238	98.5	76		42									89.5		
		MSMD04 * P32N		1/9																
		MSMD04 * P33N		1/15	248.5													100		
		MSMD04 * P34N		1/25	263.5						61	40	90	24	75	18	28	104	5	
		MSMD082P31N	750W	1/5	255.5	112	86.5	25.5	52.2	8	50	30	70	19	62	17	22	93.5	3	
		MSMD082P32N		1/9	270.5						61	40	90	24	75	18	28	97.5	5	
		MSMD082P33N		1/15	283													110		
		MSMD082P34N		1/25																
	With brake	MSMD01 * P41N	100W	1/5	221.5	122	98	24	40.8	6	32	20	50	12	45	10	14	67.5	3	25
		MSMD01 * P42N		1/9																
		MSMD01 * P43N		1/15	232													78		
		MSMD01 * P44N		1/25	264						50	30	70	19	62	17	22	92		
		MSMD02 * P41N	200W	1/5	220	115.5	93	22.5	22.5	6.5	32	20	50	12	45	10	14	72.5		34
		MSMD02 * P42N		1/9	255						50	30	70	19	62	17	22	89.5		
		MSMD02 * P43N		1/15	265.5													100		
		MSMD02 * P44N		1/25																
		MSMD04 * P41N	400W	1/5	274.5	135	112.5		42									89.5		
		MSMD04 * P42N		1/9																
		MSMD04 * P43N		1/15	285													100		
		MSMD04 * P44N		1/25	300						61	40	90	24	75	18	28	104	5	
		MSMD082P41N	750W	1/5	292.5	149	123.5	25.5	52.2	8	50	30	70	19	62	17	22	93.5	3	
		MSMD082P42N		1/9	307.5						61	40	90	24	75	18	28	97.5	5	
		MSMD082P43N		1/15	320													110		
		MSMD082P44N		1/25																

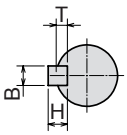

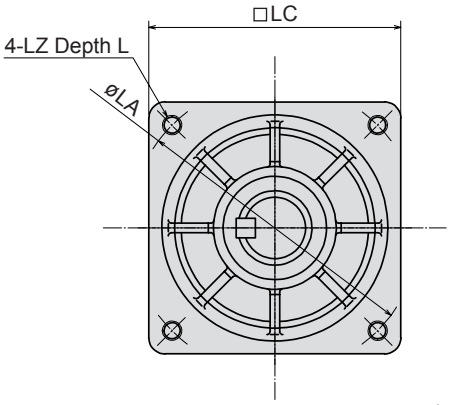

(unit : mm)

		LC	LA	LZ	LD	Kew way dimensions (B x H x LK)	T	LN	Mass (kg)	Moment of inertia (x 10^{-4}kg·m^2)
MSMD	Without brake	52	60	M5	12	4 x 4 x 16	2.5	32	1.02	0.0910
										0.0853
									1.17	0.0860
		78	90	M6	20	6 x 6 x 22	3.5		2.17	0.0885
		52	60	M5	12	4 x 4 x 16	2.5	43	1.54	0.258
		78	90	M6	20	6 x 6 x 22	3.5		2.52	0.408
										0.440
										0.428
									2.9	0.623
										0.528
									3.3	0.560
		98	115	M8		8 x 7 x 30	4		4.4	0.560
		78	90	M6		6 x 6 x 22	3.5	53		1.583
		98	115	M8		8 x 7 x 30	4		5.7	1.520
									6.1	1.570
										1.520
	With brake	52	60	M5	12	4 x 4 x 16	2.5	32	1.23	0.0940
										0.0883
									1.38	0.0890
		78	90	M6	20	6 x 6 x 22	3.5		2.38	0.0915
		52	60	M5	12	4 x 4 x 16	2.5	43	2.02	0.278
		78	90	M6	20	6 x 6 x 22	3.5		3.00	0.428
										0.460
										0.448
									3.4	0.643
										0.548
									3.8	0.580
		98	115	M8		8 x 7 x 30	4		4.9	0.580
		78	90	M6		6 x 6 x 22	3.5	53	5.2	1.683
		98	115	M8		8 x 7 x 30	4		6.5	1.620
									6.9	1.670
										1.620

Moment of inertia is combined value of the motor and the gear reducer, and converted to that of the motor shaft .

Permissible Load at Output Shaft

Radial load (P) direction

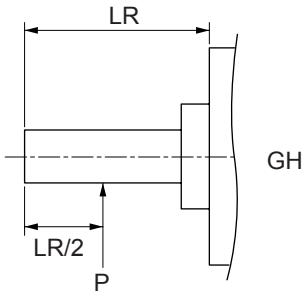

Thrust load (A and B) direction

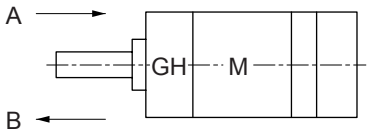

Unit : N (1kgf=9.8N)

Motor output	Motor output	Permissible load at shaft	
		Radial thrust	Thrust load A and B-direction
~ 100W~ ~ ~	1/5~	490~	245~
	1/9~	588~	294~
	1/15~	784~	392~
	1/25~	1670~	833~
~ 200W~ ~ ~	1/5~	490~	245~
	1/9~	1180~	588~
	1/15~	1470~	735~
	1/25~	1670~	833~
~ 400W~ ~ ~	1/5~	980~	490~
	1/9~	1180~	588~
	1/15~	1470~	735~
	1/25~	2060~	1030~
~ 750W	1/5~	980~	490~
	1/9~	1470~	735~
	1/15~	1760~	882~
	1/25~	2650	1320

~

Remarks on installation

(1) Do not hit the output shaft of the gear reducer when attaching a pulley or sprocket to it. Or it may cause an abnormal noise.
(2) Apply the load of the pulley or the sprocket to as close to the base of the output shaft as possible.
(3) Check the mounting accuracy and strenght of the stiff joint, when you use it.
(4) The encoder is built in to the motor. If an excessive impact is applied to the motor while assembling it to the machine, the encoder might be damaged. Pay an extrta attention at assembly.

Supply voltage to driver	Reduction ratio / Motor output	1/5	1/9	1/15	1/25
100V	100W	MSMD011 * * 1N 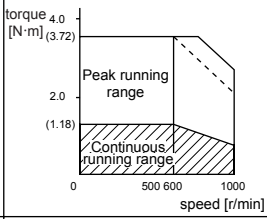	MSMD011 * * 2N 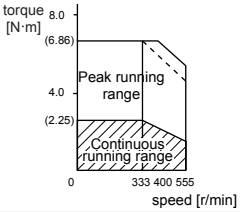	MSMD011 * * 3N 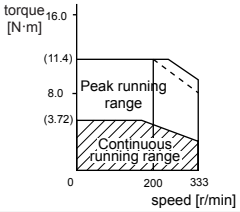	MSMD011 * * 4N 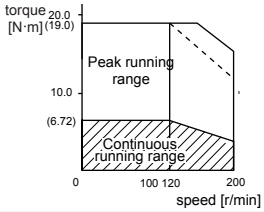
	200W	MSMD021 * * 1N 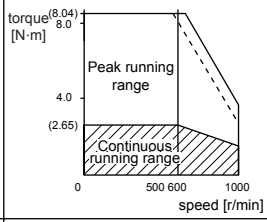	MSMD021 * * 2N 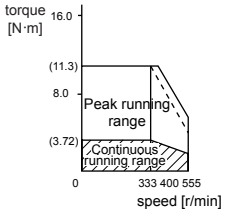	MSMD021 * * 3N 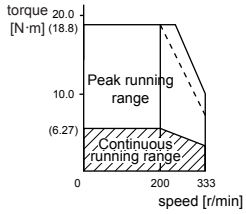	MSMD021 * * 4N 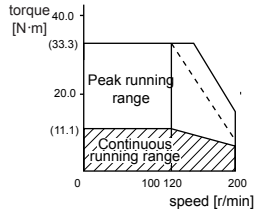
	400W	MSMD041 * * 1N 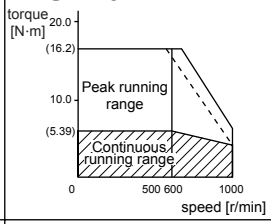	MSMD041 * * 2N 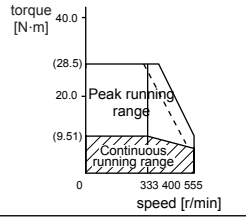	MSMD041 * * 3N 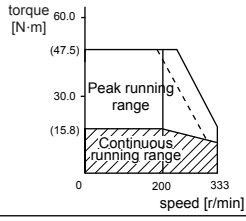	MSMD041 * * 4N 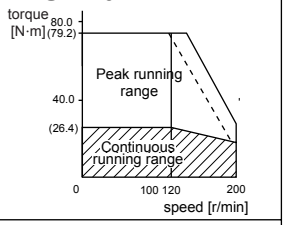
200V	100W	MSMD012 * * 1N 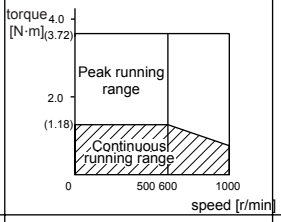	MSMD012 * * 2N 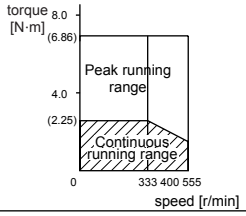	MSMD012 * * 3N 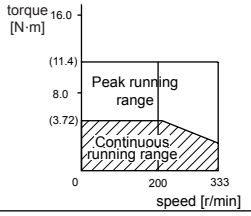	MSMD012 * * 4N 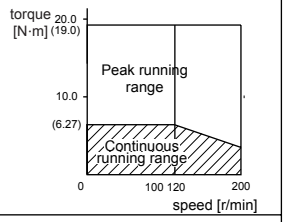
	200W	MSMD022 * * 1N 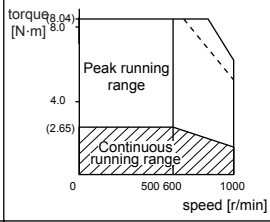	MSMD022 * * 2N 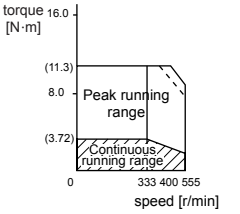	MSMD022 * * 3N 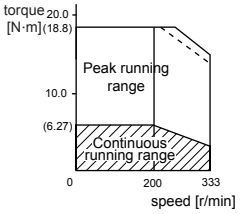	MSMD022 * * 4N 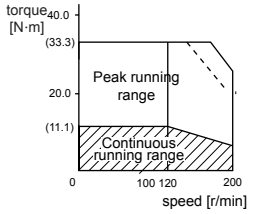
	400W	MSMD042 * * 1N 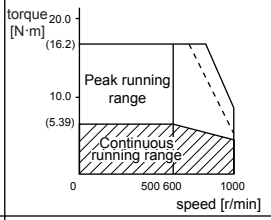	MSMD042 * * 2N 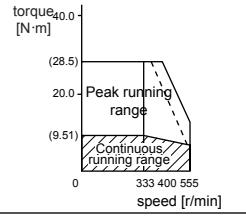	MSMD042 * * 3N 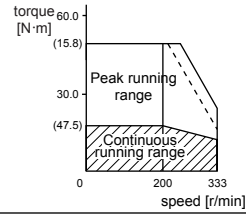	MSMD042 * * 4N 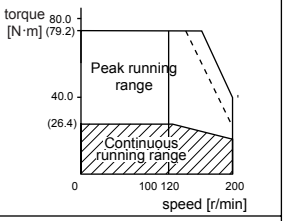
	750W	MSMD082 * * 1N 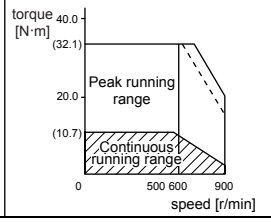	MSMD082 * * 2N 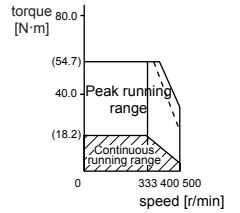	MSMD082 * * 3N 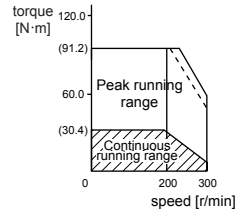	MSMD082 * * 4N 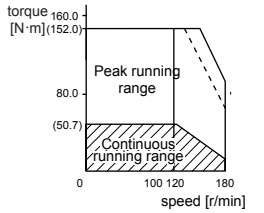

Dotted line represents the torque at 10% less supply voltage.

Supplement

Block Diagram of Driver

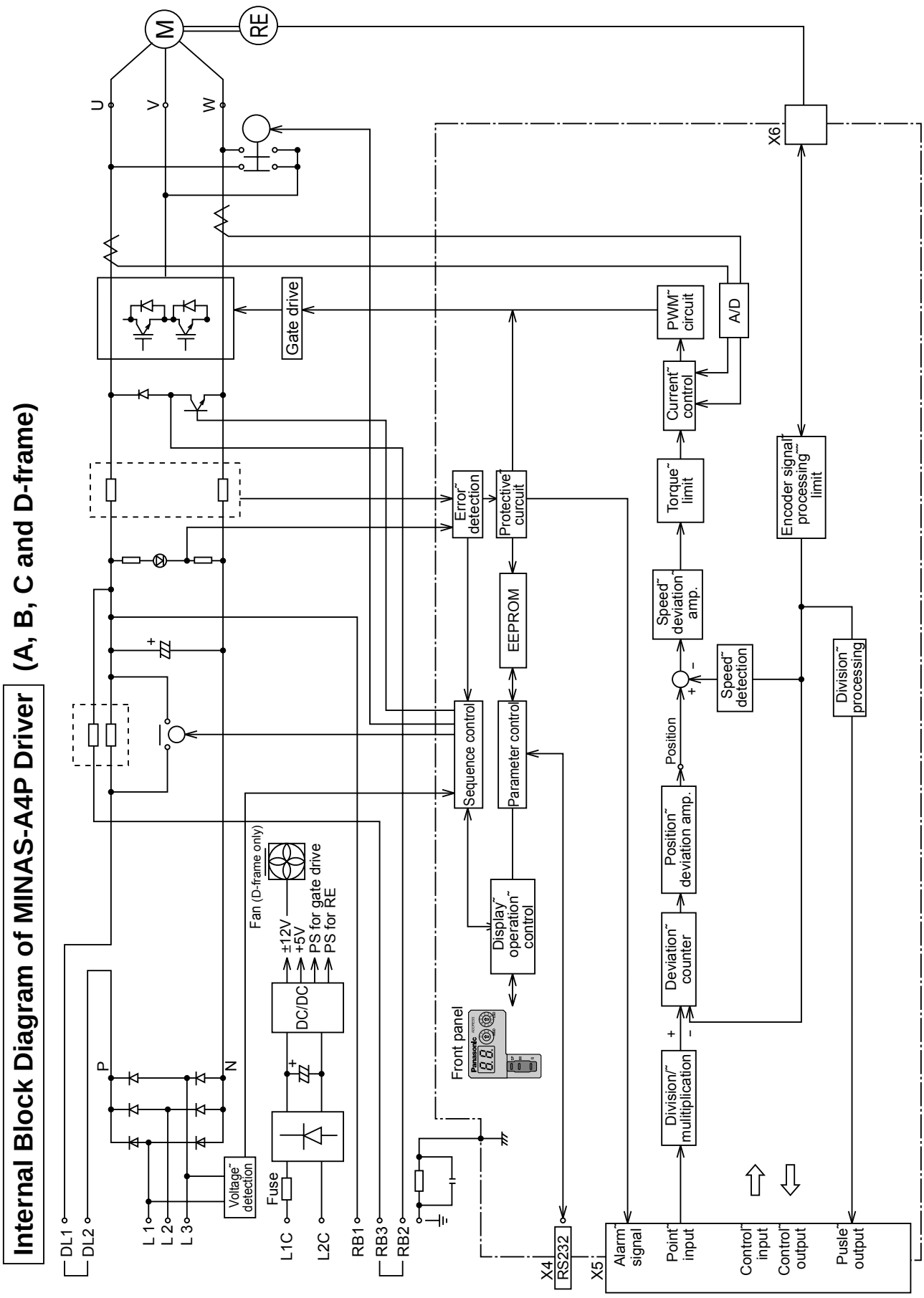

Internal Block Diagram of MINAS-A4P Driver (E and F-frame)

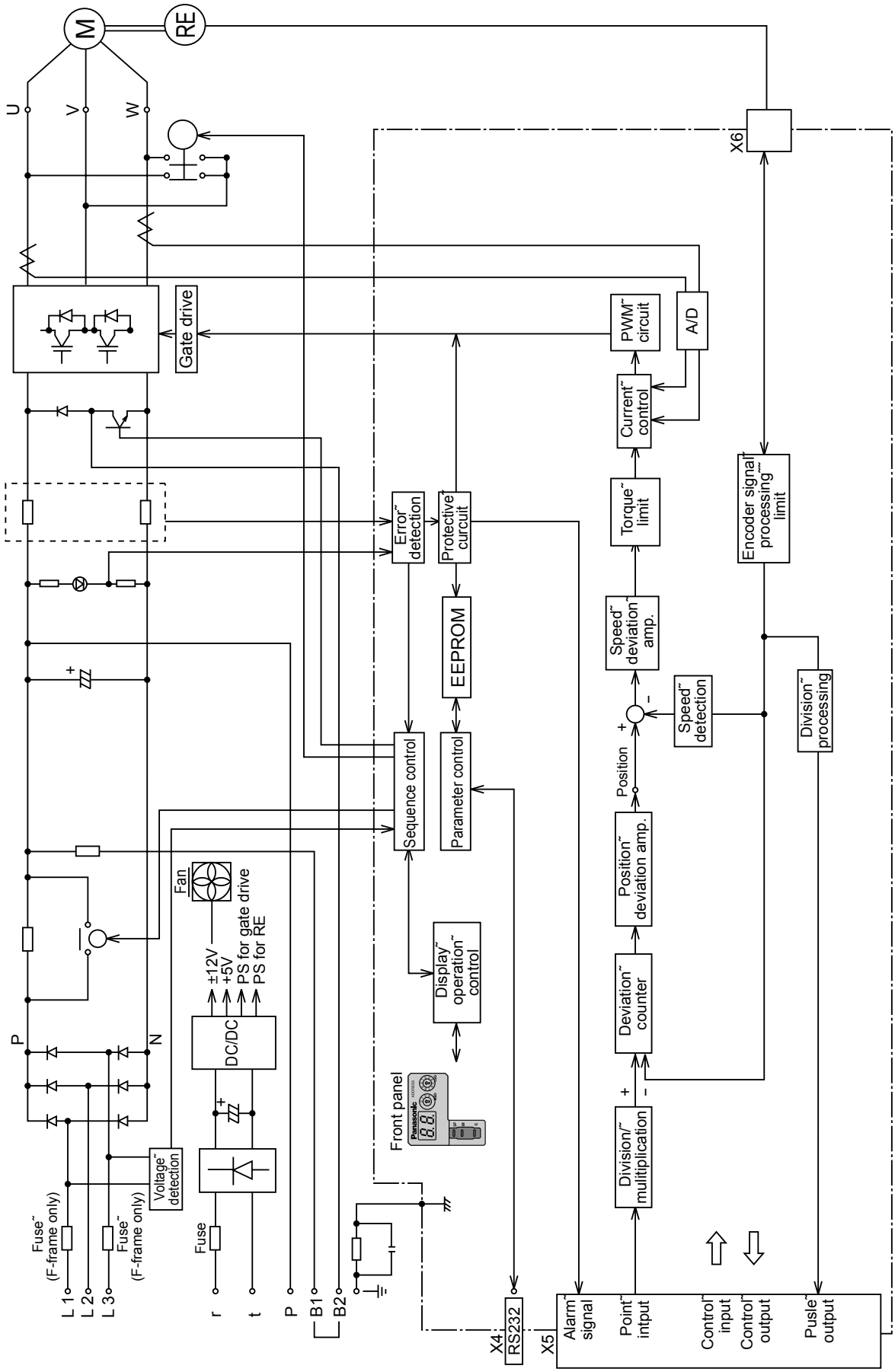

Supplement

Block Diagram by Control Mode

Position Control Mode

• when Pr02 (Setup of control mode) is 0

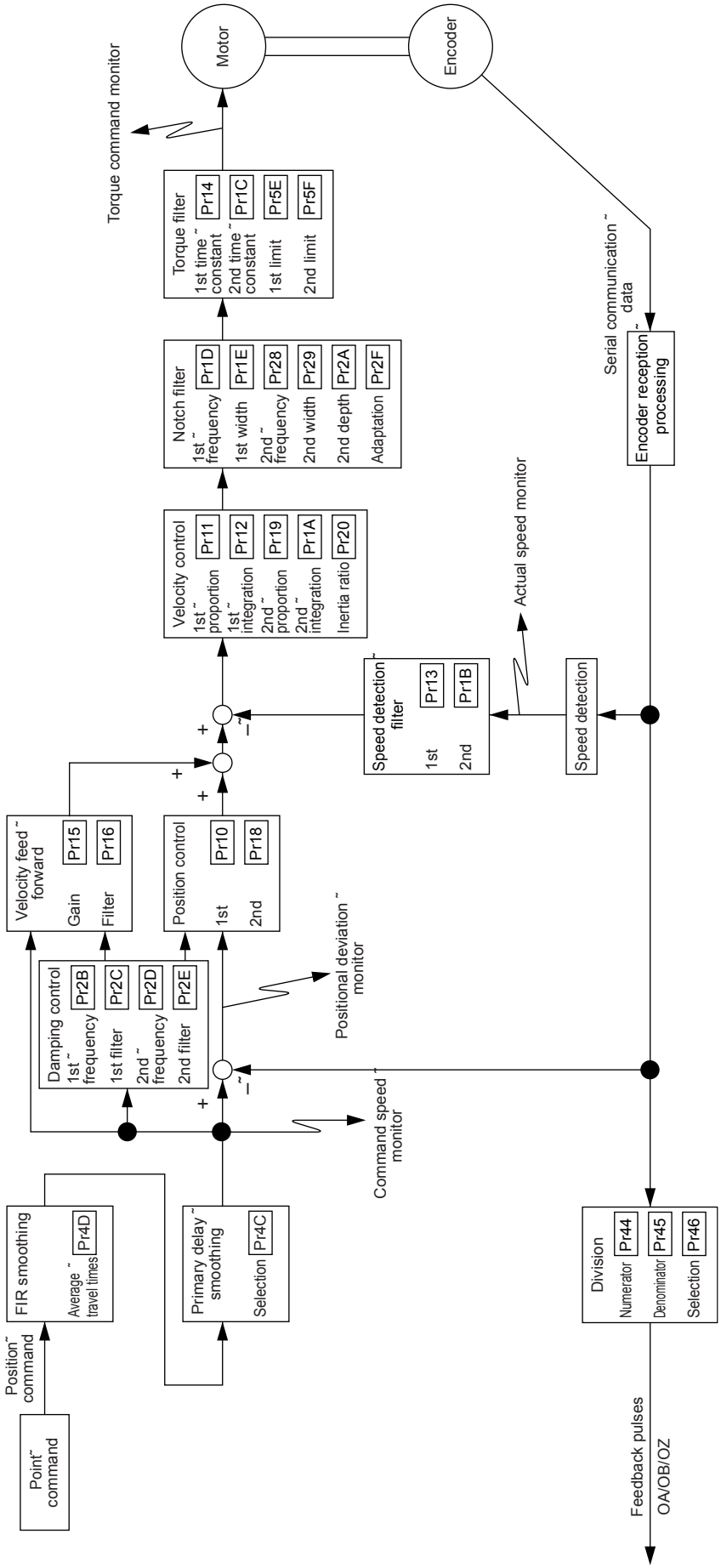

Full-closed Control Mode

• when Pr02 (Setup of control mode) is 6

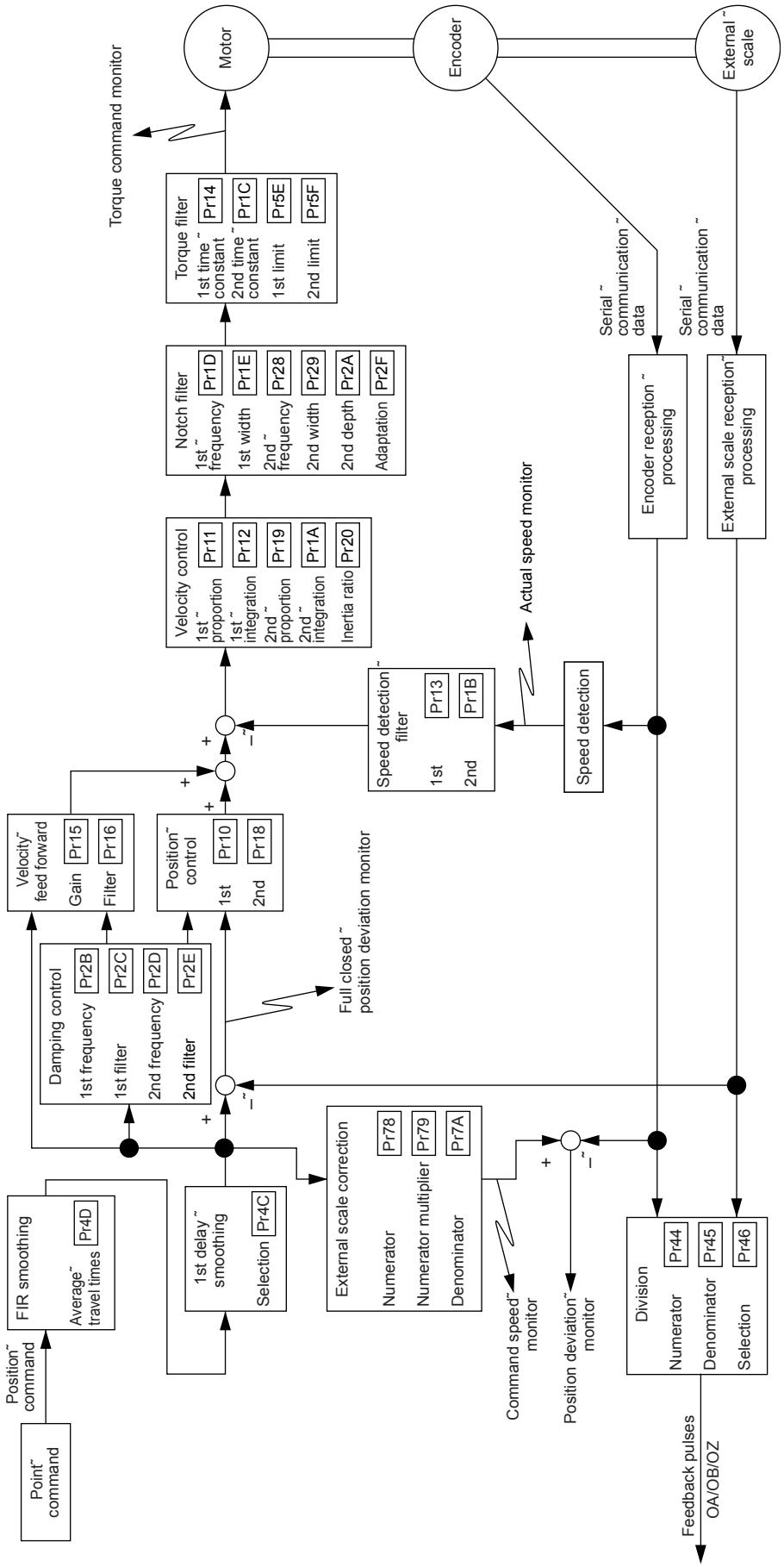

Supplement

Specifications (Driver)

Basic specifications	Input power supply	100V-˜ line	Main circuit˜ power		Single phase, 100 – 115V +10%˜ –15%˜ 50/60Hz
			Control circuit˜ power		Single phase, 100 – 115V +10%˜ –15%˜ 50/60Hz
		200V-˜ line	Main˜ circuit˜ power	Type˜ A, B	Single phase, 200 – 240V +10%˜ –15%˜ 50/60Hz
				Type˜ C, D	Single/3-phase, 200 – 240V +10%˜ –15%˜ 50/60Hz
				Type˜ E, F	3-phase, 200 – 230V +10%˜ –15%˜ 50/60Hz
			Control˜ circuit˜ power	Type˜ A to D	Single phase, 200 – 240V +10%˜ –15%˜ 50/60Hz
				Type˜ E, F	Single phase, 200 – 230V +10%˜ –15%˜ 50/60Hz
	Operation˜ conditions		Temperature˜		Operation temperature: 0 to 55 degrees Storage temperature: –20 to 80 degrees˜
			Humidity˜		Operation/storage humidity 90%RH or less (no condensation)˜
			Height above the sea˜		Height above the sea level: 1000 m or less˜
			Vibration		5.88 m/s^2 or less, 10 to 60 Hz (Continuous operation at resonance point is not allowed)˜
	Control method˜				IGBT PWM method, sinusoidal drive˜
	Control mode˜				Select Position control or Full-closed control by parameter.˜
	Encoder feedback˜ ˜				17 Bit (resolution: 131072) 7-serial absolute encoder˜ 2500 p/r (resolution: 10000) 5-serial incremental encoder˜
	External scale feedback˜				Compatible with ST771 and AT500 made by Mitutoyo Corporation˜
	˜ Control ˜ signal˜ ˜		Input˜ (14 inputs)˜ ˜		CW over-travel inhibit, CCW over-travel inhibit, Home sensor, Emergency stop, Point specifying x6˜ Servo-ON, Strobe, Multi- function input x2˜
			Output˜ (10 outputs)		Servo alarm, Brake release signal, Present position output x6, ˜ Positioning completion / Output during deceleration, Motor operation condition,˜
	Pulse˜ signal˜		Input˜ (4 inputs)		Encoder pulse (A/B/Z-phase) or external scale pulse (EXA/EXB-phase)is output by the line driver.˜ For encoder Z-phase pulse, an open collector output is also available.˜
	Setup˜ ˜				Setup with Panaterm® or a console is available.˜ (Panaterm® and a console are sold separately)˜
	˜ Front panel˜				[1] 7-segment LED 2-digit˜ [2] Analogue monitor pin (velocity monitor and torque monitor)˜
	˜ Regeneration˜				Type A-B : No internal regenerative resist (external only)˜ Type C-F : internal regenerative resist (external is also available)˜
	Dynamic brake				Built in

Function	Damping Control			A function to reduce vibration by removing the vibration frequency component˜ when the front end of the machine vibrates.
	External scale division ˜ gradual increase ˜ setting range			Ratio between the encoder pulse (numerator) and the external scale pulse (denominator)˜ can be set within the setting range : (1 to 10000 x $2^{(0-17)}$)/(1 to 10000)
	The number of points			maximum 60 points
	Operation mode	Homing˜ operation		Eight types of homing operations˜ [home sensor + Z phase (based on the front end), home sensor (based on the front end), ˜ home sensor + Z phase (based on the rear end), limit sensor + Z phase, limit sensor, ˜ Z phase homing, Bumping homing, and data set]
		Jog operation		The motor can be moved in a positive direction or negative direction independently.˜ This is useful for teaching or adjustment.
		Step operation		The most basic operation. Specify a point number set in advance when performing the operation.˜ The four types of modes [incremental operation, absolute operation, ˜ rotary axis operation and dwell timer (waiting time)]
		Block operation	Continuous block˜ operation	Several step operations can be performed continuously.˜ Once an operation starts, the operation continues to a specified point number.
			Combined block˜ operation	A step operation is performed according to combined several point numbers.˜ This is useful when you want to change the speed during a step operation.
		Sequential˜ Operation		A point number increments by 1 automatically whenever an operation command is given.˜ A step operation can be performed easily only by turning the STB signal on/off.
		Teaching˜ (Console (option)˜ is necessary)		You can operate the motor actually using this console, ˜ set a target position and execute some test operations.
	Auto tuning	Real time˜ ˜		Load inertia is determined at real time in the state of actual operation˜ and gain corresponding to the rigidity is set automatically.
		Normal mode		Load inertia is determined by driving the equipment with operation command˜ within the driver and gain corresponding to the rigidity is set automatically.
	Instantaneous˜ speed observer			Available only for position control.˜ A function to improve the speed detection accuracy,˜ achieve the quick response and, at the same time,˜ reduce the vibration at the stop by estimating the motor speed using a load model.
	Unnecessary wiring ˜ mask function			The following control input signal can be masked:˜ CW over-travel inhibit, CCW over-travel inhibit, multi function input1 and 2 ,˜ point specifying input(P8-IN,P16-IN,P32-IN), Servo-ON
	Division function of ˜ encoder feedback pulse			The number of pulses can be set up arbitrarily. (at the maximum encoder pulse)˜ ˜
	Protection˜ function˜ ˜	Hardware error˜		Overload, undervoltage, overspeed, overload, overheat, over current, encoder error, etc.
		Software error		Large positional deviation, Undefined data error , EEPROM error, etc.
	Alarm data trace back function			Traceable up to 14 alarm data including present alarm data.

Supplement

Default Parameters (for all the models of A4P Series)

• Servo parameter (SV.Pr)

SV.Pr* *	Parameter	Default
00˜	(For manufacturer's use)˜	1˜
01˜	7-segment LED status for console, initial condition display˜	1˜
02˜	Control mode˜	0˜
03˜	Torque limit selection˜	1˜
04˜	(For manufacturer's use)˜	1˜
05˜	(For manufacturer's use)˜	0˜
06˜	(For manufacturer's use)˜	0˜
07˜	Speed monitor (SP) selection˜	3˜
08˜	Torque monitor (IM) selection˜	0˜
09˜	(For manufacturer's use)˜	0˜
0A˜	(For manufacturer's use)˜	1˜
0B˜	Absolute encoder set up˜	1˜
0C˜	Baud rate of RS232˜	2˜
0D˜	(For manufacturer's use)˜	5˜
0E˜	(For manufacturer's use)˜	0˜
0F˜	Node address˜	0˜
10˜	1st position loop gain (*2)˜	(63/32)˜
11˜	1st velocity loop gain (*2)˜	(35/18)˜
12˜	1st velocity loop integration time constant (*2)˜	(16/31)˜
13˜	1st speed detection filter˜	(0)˜
14˜	1st torque filter time constant (*2)˜	(65/126)˜
15˜	Velocity feed forward˜	(300)˜
16˜	Feed forward filter time constant˜	(50)˜
17˜	(For manufacturer's use)˜	0˜
18˜	2nd position loop gain (*2)˜	(73/38)˜
19˜	2nd velocity loop gain (*2)˜	(35/18)˜
1A˜	2nd velocity loop integration time constant˜	(1000)˜
1B˜	2nd speed detection filter˜	(0)˜
1C˜	2nd torque filter time constant (*2)˜	(65/126)˜
1D˜	1st notch frequency˜	1500˜
1E˜	1st notch width selection˜	2˜
1F˜	(For manufacturer's use)˜	0˜
20˜	Inertia ratio˜	(250)˜
21˜	Real time auto tuning set up˜	1˜
22˜	Machine stiffness at auto tuning (*2)˜	4/1˜
23˜	Adaptive filter mode˜	1˜
24˜	Vibration suppression filter switching selection˜	0˜
25˜	Normal auto tuning motion setup˜	0˜
26˜	Software limit set up˜	10˜
27˜	Velocity observer˜	(0)˜
28˜	2nd notch frequency˜	1500˜
29˜	2nd notch width selection˜	2˜
2A˜	2nd notch depth selection˜	0˜
2B˜	1st vibration suppression frequency˜	0˜
2C˜	1st vibration suppression filter˜	0˜
2D˜	2nd vibration suppression frequency˜	0˜
2E˜	2nd vibration suppression filter˜	0˜
2F˜	Adaptive filter frequency˜	0˜
30˜	2nd gain action set up˜	(1)˜
31˜	1st control switching mode˜	(10)˜
32˜	1st control switching delay time˜	(30)˜
33˜	1st control switching level˜	(50)˜
34˜	1st control switching hysteresis˜	(33)˜
35˜	Position loop gain switching time˜	(20)˜
36˜	(For manufacturer's use)˜	(0)˜
37˜	(For manufacturer's use)˜	0˜
38˜	(For manufacturer's use)˜	0˜
39˜	(For manufacturer's use)˜	0˜
3A˜	(For manufacturer's use)˜	0˜
3B˜	(For manufacturer's use)˜	0˜
3C˜	(For manufacturer's use)˜	0˜
3D˜	(For manufacturer's use)˜	300˜
3E˜	(For manufacturer's use)˜	0˜
3F	(For manufacturer's use)	0

SV.Pr* *	Parameter	Default
40˜	(For manufacturer's use)˜	5˜
41˜	(For manufacturer's use)˜	500˜
42˜	(For manufacturer's use)˜	0˜
43˜	(For manufacturer's use)˜	0˜
44˜	Numerator of output pulse ratio˜	10000˜
45˜	Denominator of output pulse ratio˜	10000˜
46˜	Pulse output logic inversion˜	0˜
47˜	(For manufacturer's use)˜	0˜
48˜	(For manufacturer's use)˜	10000˜
49˜	(For manufacturer's use)˜	0˜
4A˜	(For manufacturer's use)˜	0˜
4B˜	(For manufacturer's use)˜	10000˜
4C˜	Smoothing filter˜	1˜
4D˜	FIR filter set up˜	0˜
4E˜	(For manufacturer's use)˜	2˜
4F˜	(For manufacturer's use)˜	0˜
50˜	(For manufacturer's use)˜	0˜
51˜	(For manufacturer's use)˜	0˜
52˜	(For manufacturer's use)˜	2˜
53˜	Over-travel inhibit input valid˜	1˜
54˜	Over-travel inhibit input logic˜	0˜
55˜	Over-travel inhibit input operation setting˜	1˜
56˜	Home sensor input logic˜	1˜
57˜	Selecting the number of input points˜	2˜
58˜	Point specifying input logic setting˜	1˜
59˜	Multi-function input 1 Signal logic˜	1˜
5A˜	Multi-function input 1 Signal selection˜	0˜
5B˜	Multi-function input 2 Signal logic˜	1˜
5C˜	Multi-function input 2 Selection logic˜	0˜
5D˜	Servo-ON input valid˜	1˜
5E˜	1st torque limit (*1)˜	500˜
5F˜	2nd torque limit (*1)˜	500˜
60˜	In-position range˜	131˜
61˜	(For manufacturer's use)˜	50˜
62˜	(For manufacturer's use)˜	1000˜
63˜	(For manufacturer's use)˜	0˜
64˜	Output signal selection˜	0˜
65˜	Undervoltage error response at main power-off˜	1˜
66˜	(For manufacturer's use)˜	0˜
67˜	Error response at main power-off˜	0˜
68˜	Error response action˜	0˜
69˜	Sequence at Servo-OFF˜	0˜
6A˜	Mechanical brake delay at motor standstill˜	0˜
6B˜	Mechanical brake delay at motor in motion˜	0˜
6C˜	External regenerative resistor set up (*2)˜	0/3˜
6D˜	Main power-off detection time˜	35˜
6E˜	Emergency stop torque set up˜	0˜
6F˜	(For manufacturer's use)˜	0˜
70˜	Position deviation error level˜	25000˜
71˜	(For manufacturer's use)˜	0˜
72˜	Overload level˜	0˜
73˜	Overspeed level˜	0˜
74˜	(For manufacturer's use)˜	0˜
75˜	(For manufacturer's use)˜	0˜
76˜	(For manufacturer's use)˜	0˜
77˜	(For manufacturer's use)˜	0˜
78˜	Numerator of external scale ratio˜	10000˜
79˜	Multiplier of numerator of external scale ratio˜	0˜
7A˜	Denominator of external scale ratio˜	10000˜
7B˜	Hybrid deviation error level˜	100˜
7C˜	External scale direction˜	0˜
7D˜	(For manufacturer's use)˜	0˜
7E˜	(For manufacturer's use)˜	0˜
7F	(For manufacturer's use)	0

*1) A maximum value of SV.Pr5E (torque limit setting) varies depending on an applicable motor. Refer to page 78.˜

*2) Default parameters of SV.Pr10 to 12, 14, 18, 19, 1C, 22 and 6C vary depending on a driver.˜

*3) The parameters with parenthesized set value are specified automatically when real-time auto-gain tuning or normal-mode ˜ auto-gain tuning has been executed.

• 16-bit positioning parameter (16.Pr)

16.Pr* *	Parameter	Default
00˜	1st speed˜	0˜
01˜	2nd speed˜	0˜
02˜	3rd speed˜	0˜
03˜	4th speed˜	0˜
04˜	5th speed˜	0˜
05˜	6th speed˜	0˜
06˜	7th speed˜	0˜
07˜	8th speed˜	0˜
08˜	9th speed˜	0˜
09˜	10th speed˜	0˜
0A˜	11th speed˜	0˜
0B˜	12th speed˜	0˜
0C˜	13th speed˜	0˜
0D˜	14th speed˜	0˜
0E˜	15th speed˜	0˜
0F˜	16th speed˜	0˜
10˜	1st acceleration ˜	0˜
11˜	1st S-shaped acceleration ˜	0˜
12˜	1st deceleration˜	0˜
13˜	1st S-shaped deceleration ˜	0˜
14˜	2nd acceleration ˜	0˜
15˜	2nd S-shaped acceleration ˜	0˜
16˜	2nd deceleration˜	0˜
17˜	2nd S-shaped deceleration˜	0˜
18˜	3rd acceleration ˜	0˜
19˜	3rd S-shaped acceleration ˜	0˜
1A˜	3rd deceleration˜	0˜
1B˜	3rd S-shaped deceleration ˜	0˜
1C˜	4th acceleration ˜	0˜
1D˜	4th S-shaped acceleration ˜	0˜
1E˜	4th deceleration˜	0˜
1F˜	4th S-shaped deceleration ˜	0˜
20˜	(For manufacturer's use)˜	0˜
21˜	(For manufacturer's use)˜	0˜
22˜	(For manufacturer's use)˜	0˜
23˜	(For manufacturer's use)˜	0˜
24˜	(For manufacturer's use)˜	0˜
25˜	(For manufacturer's use)˜	0˜
26˜	(For manufacturer's use)˜	0˜
27˜	(For manufacturer's use)˜	0˜
28˜	(For manufacturer's use)˜	0˜
29˜	(For manufacturer's use)˜	0˜
2A˜	(For manufacturer's use)˜	0˜
2B˜	(For manufacturer's use)˜	0˜
2C˜	(For manufacturer's use)˜	0˜
2D˜	(For manufacturer's use)˜	0˜
2E˜	(For manufacturer's use)˜	0˜
2F˜	(For manufacturer's use)˜	0˜
30˜	Homing speed (fast)˜	0˜
31˜	Homing speed (slow)˜	0˜
32˜	Homing offset speed˜	0˜
33	Homing acceleration	0

16.Pr* *	Parameter	Default
34˜	Homing deceleration˜	0˜
35˜	Homing direction˜	0˜
36˜	Homing type˜	0˜
37˜	Home complete type˜	0˜
38˜	Homing skip˜	0˜
39˜	Bumping detection time˜	0˜
3A˜	Torque limit for bumping homing˜	0˜
3B˜	Homing Z-phase count setting˜	0˜
3C˜	(For manufacturer's use)˜	0˜
3D˜	(For manufacturer's use)˜	0˜
3E˜	(For manufacturer's use)˜	0˜
3F˜	(For manufacturer's use)˜	0˜
40˜	Jog speed (low)˜	0˜
41˜	Jog speed (high)˜	0˜
42˜	Acceleration setting in jog operation˜	0˜
43˜	Setting of S-shaped acceleration in jog operation˜	0˜
44˜	Setting of deceleration in jog operation˜	0˜
45˜	Setting of S-shaped deceleration in jog operation˜	0˜
46˜	(For manufacturer's use)˜	0˜
47˜	(For manufacturer's use)˜	0˜
48˜	Teaching movement amount setting˜	0˜
49˜	Instantaneous stop deceleration time˜	0˜
4A˜	(For manufacturer's use)˜	0˜
4B˜	(For manufacturer's use)˜	0˜
4C˜	(For manufacturer's use)˜	0˜
4D˜	(For manufacturer's use)˜	0˜
4E˜	(For manufacturer's use)˜	0˜
4F˜	(For manufacturer's use)˜	0˜
50˜	Operation direction setting˜	1˜
51˜	Wrap around permission˜	0˜
52˜	Sequential operation setting˜	0˜
53˜	Sequential operation maximum point number˜	0˜
54˜	Block operation type˜	0˜
55˜	(For manufacturer's use)˜	0˜
56˜	(For manufacturer's use)˜	0˜
57˜	(For manufacturer's use)˜	0˜
58˜	(For manufacturer's use)˜	0˜
59˜	(For manufacturer's use)˜	0˜
5A˜	(For manufacturer's use)˜	0˜
5B˜	(For manufacturer's use)˜	0˜
5C˜	(For manufacturer's use)˜	0˜
5D˜	(For manufacturer's use)˜	0˜
5E˜	(For manufacturer's use)˜	0˜
5F˜	(For manufacturer's use)˜	0˜
60˜	(For manufacturer's use)˜	0˜
61˜	(For manufacturer's use)˜	0˜
62˜	(For manufacturer's use)˜	0˜
63˜	(For manufacturer's use)˜	0˜
64˜	(For manufacturer's use)˜	0˜
65˜	(For manufacturer's use)˜	0˜
66˜	(For manufacturer's use)˜	0˜
67	(For manufacturer's use)	0

• 32-bit positioning parameter (32.Pr)

32.Pr* *	Parameter	Default
0˜	Home offset˜	0˜
1˜	Setting of maximum movement in plus direction˜	0˜
2˜	Setting of maximum movement in minus direction˜	0˜
3˜	Movement per rotation in rotation coordinates˜	0˜
4˜	(For manufacturer's use)˜	0˜
5˜	(For manufacturer's use)˜	0˜
6˜	(For manufacturer's use)˜	0˜
7	(For manufacturer's use)	0

• Step parameter

32.Pr* *	Parameter	Default
˜ ˜ 01H˜ to˜ 3CH	Operation mode˜	Incremental˜
	Position/waiting time˜	0˜
	Speed˜	VEL1˜
	Acceleration˜	ACC1˜
	Deceleration˜	DEC1˜
	Block	Single

MEMO

Motor Company, Matsushita Electric Industrial Co.,Ltd.Marketeing Group

Tokyo: Kyobashi MID Bldg, 2-13-10 Kyobashi, Chuo-ku, Tokyo 104-0031

Osaka: 1-1, Morofuku 7-chome, Daito, Osaka 574-0044

After-Sale Service (Repair)

Repair

Consult to a dealer from whom you have purchased the product for details of repair.
When the product is incorporated to the machine or equipment you have purchased, consult to the manufacture or the dealer of the machine or equipment.

Cautions for Proper Use

- This product is intended to be used with a general industrial product, but not designed or manufactured to be used in a machine or system that may cause personal death when it is failed.
- Install a safety equipments or apparatus in your application, when a serious accident or loss of property is expected due to the failure of this product.
- Consult us if the application of this product is under such special conditions and environments as nuclear energy control, aerospace, transportation, medical equipment, various safety equipments or equipments which require a lesser air contamination.
- We have been making the best effort to ensure the highest quality of the products, however, application of exceptionally larger external noise disturbance and static electricity, or failure in input power, wiring and components may result in unexpected action. It is highly recommended that you make a fail-safe design and secure the safety in the operative range.
- If the motor shaft is not electrically grounded, it may cause an electrolytic corrosion to the bearing, depending on the condition of the machine and its mounting environment, and may result in the bearing noise. Checking and verification by customer is required.
- Failure of this product depending on its content, may generate smoke of about one cigarette. Take this into consideration when the application of the machine is clean room related.
- Please be careful when using in an environment with high concentrations of sulphur or sulphuric gases, as sulphuration can lead to disconnection from the chip resistor or a poor contact connection.
- Take care to avoid inputting a supply voltage which significantly exceeds the rated range to the power supply of this product. Failure to heed this caution may result in damage to the internal parts, causing smoking and/or a fire and other trouble.

Technical information

Electric data of this product (Instruction Manual, CAD data) can be downloaded from Panasonic Industrial web site.

MEMO (Fill in the blanks for reference in case of inquiry or repair.)

Date of purchase		**Model No.**	**M ☐ DD** _____ **M ☐ MD** _____ **M ☐ MA** _____
Dealer			
	Tel : ( ) -		

Motor Company
Matsushita Electric Industrial Co., Ltd.

CTi Automation - Phone: 800.894.0412 - Fax: 208.368.0415 - Web: www.ctiautomation.net - Email: info@ctiautomation.net